Galileo1.6

SI-2 BUILD

2008.09.29

DATE	CHANGE NO.	REV

	EE	DATE	POWER	DATE
DRAWER				
DESIGN				
CHECK				
RESPONSIBLE				

SIZE = 3 VER :

FILE NAME : XXXX-XXXXXX-XX

P/N XXXXXXXXXXXX

INVENTEC

TITLE Galileo1.6

SIZE	CODE	DOC. NUMBER	REV
A3	CS	1310A2230401-0-MTR	AX2

SHEET 1 OF 52

http://hobi-elektronika.net

TABLE OF CONTENTS

PAGE

1. COVER PAGE
2. INDEX
3. BLOCK DIAGRAM
4. POWER SEQUENCE BLOCK
5. CHARGER & OCP
6. SELECT & BATTERY CONN
7. SYSTEM POWER (3V/5V)
8. SYSTEM POWER (+V1.8 / +VCCP)
9. CPU CORE POWER
10. SYSTEM POWER(2.5S / 1.5S / 0.9S)
11. POWER SLEEP
12. POWER(SEQYENCE)

PAGE

13. CLOCK_GENERATOR
14. ATOM-1
15. ATOM-2
16. ATOM-3
17. ATOM-4
18. FAN & THERMAL CONTROLLER
19. 945GSE-1
20. 945GSE-2
21. 945GSE-3
22. 945GSE-4
23. 945GSE-5
24. 945GSE-6
25. 945GSE-7~8
26. DDR2 DIMM0
27. DDR2 PULL UP TERMINATOR
28. CRT
29. LCM & WEBCAM CONN
30. ICH7-1
31. ICH7-2
32. ICH7-3
33. ICH7-4
34. ICH7-5
35. ICH7-6

PAGE

36. NEW CARD
37. MINI CARD (WLAN)
38. LAN CONTROLLER
39. LAN RJ45
40. CARD READER
41. ACCELEROMTER & HDD CONN & USB CONN
42. SPI & kEYBOARD CONN & TOUCHPAD CONN
43. KBC1070
44. LID & LED
45. BLUETOOTH & WIRELESS DB CONN
46. EMI CAP
47. CODEC(1984A)
48. SPEAKER & MIC
49. HEADPHONE & INT MIC
50. POWER CONN
51. POWER BUTTON SWITCH DB
52.WIRELESS SWITCH DB
53~54.POWER SEQUENCE

http://hobi-elektronika.net

INVENTEC			
TITLE Galileo1.6			
SIZE A3	CODE CS	DOC. NUMBER 1310A2230401-0-MTR	REV AX2
CHANGE by Phil_Huang	29-Sep-2008	SHEET 2 OF 52	

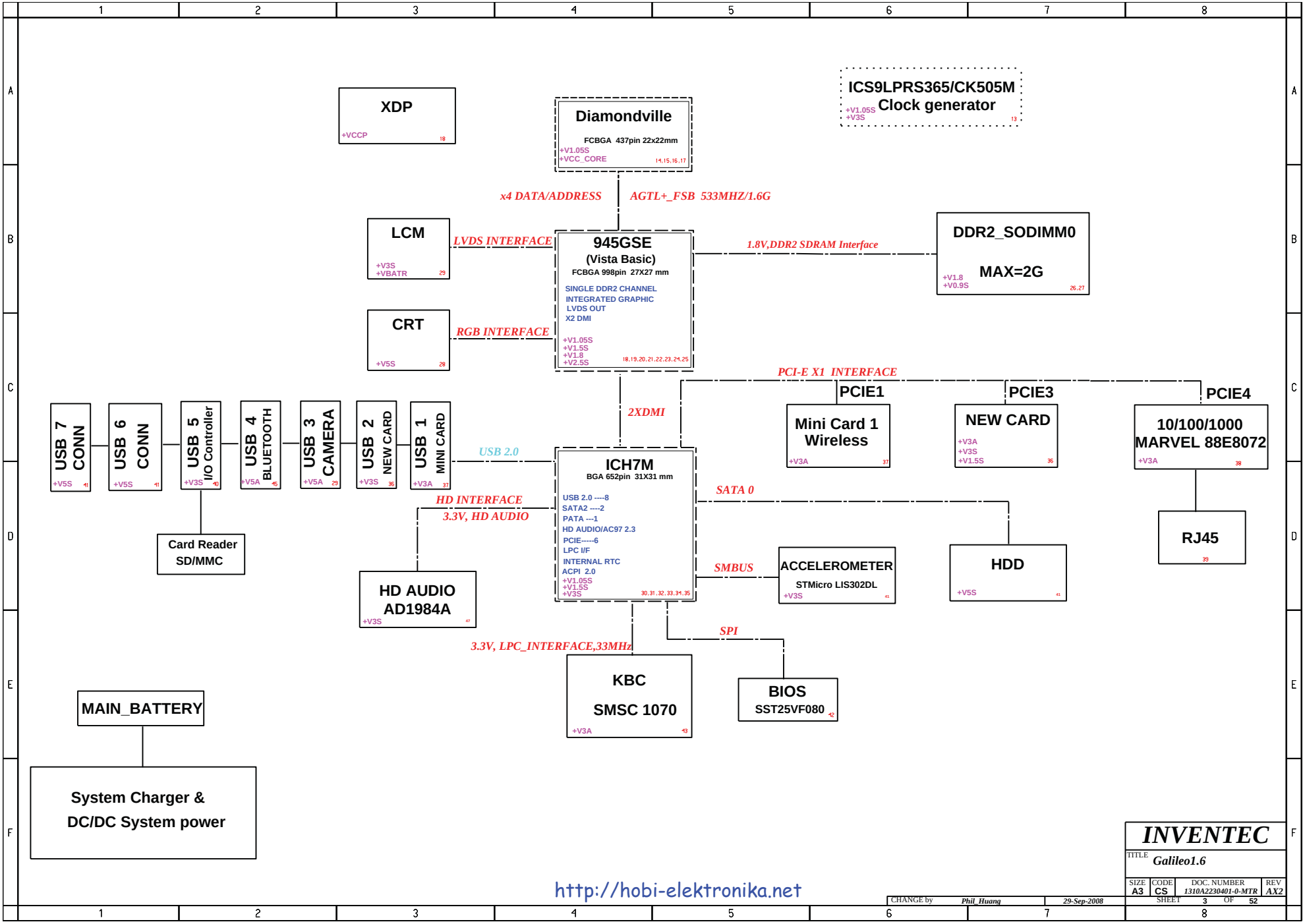

http://hobi-elektronika.net

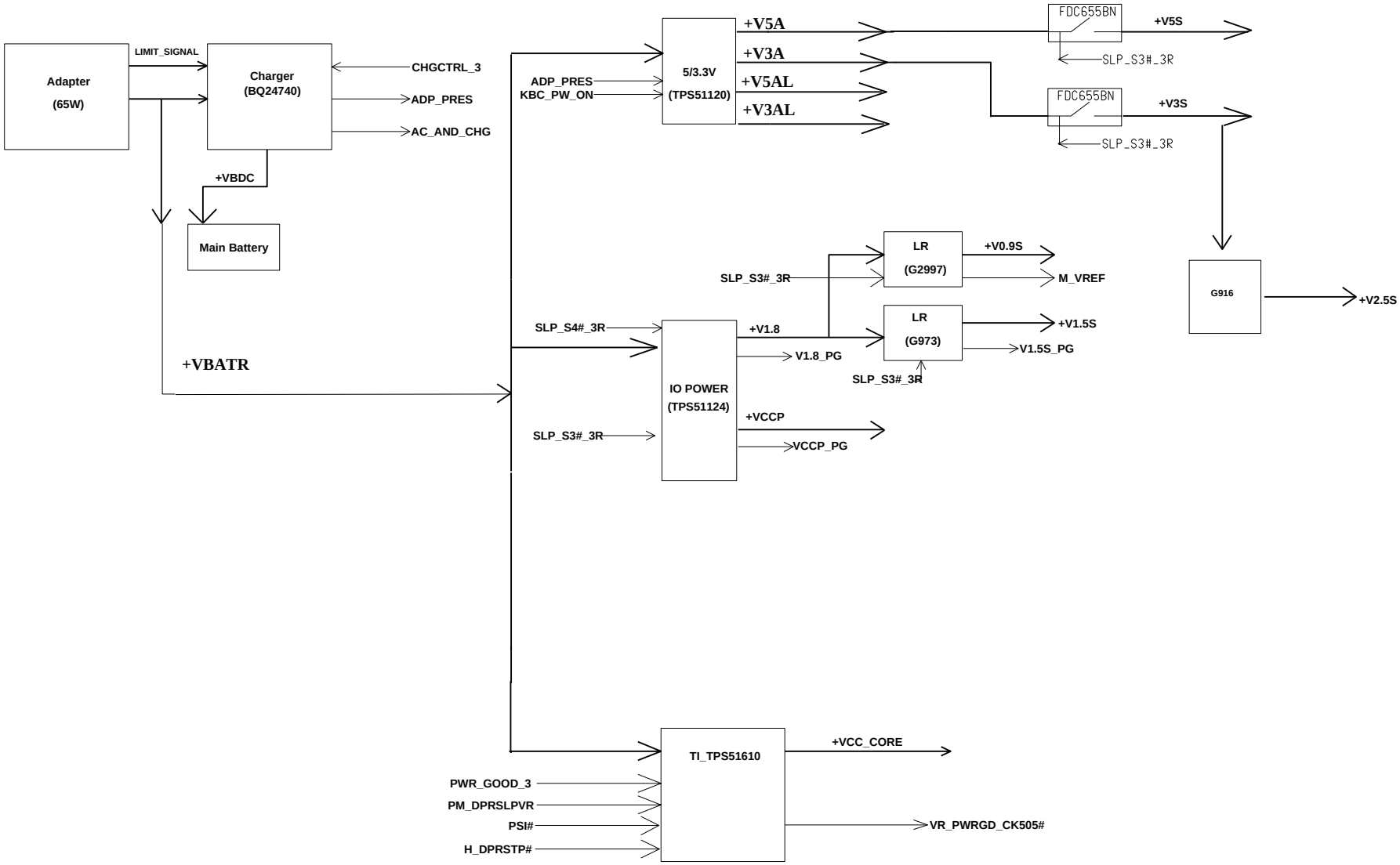

http://hobi-elektronika.net

INVENTEC			
TITLE Galileo1.6			
SIZE A3	CODE CS	DOC. NUMBER 1310A2230401-0-MTR	REV AX2
CHANGE by Phil_Huang	29-Sep-2008	SHEET 4 OF 52	

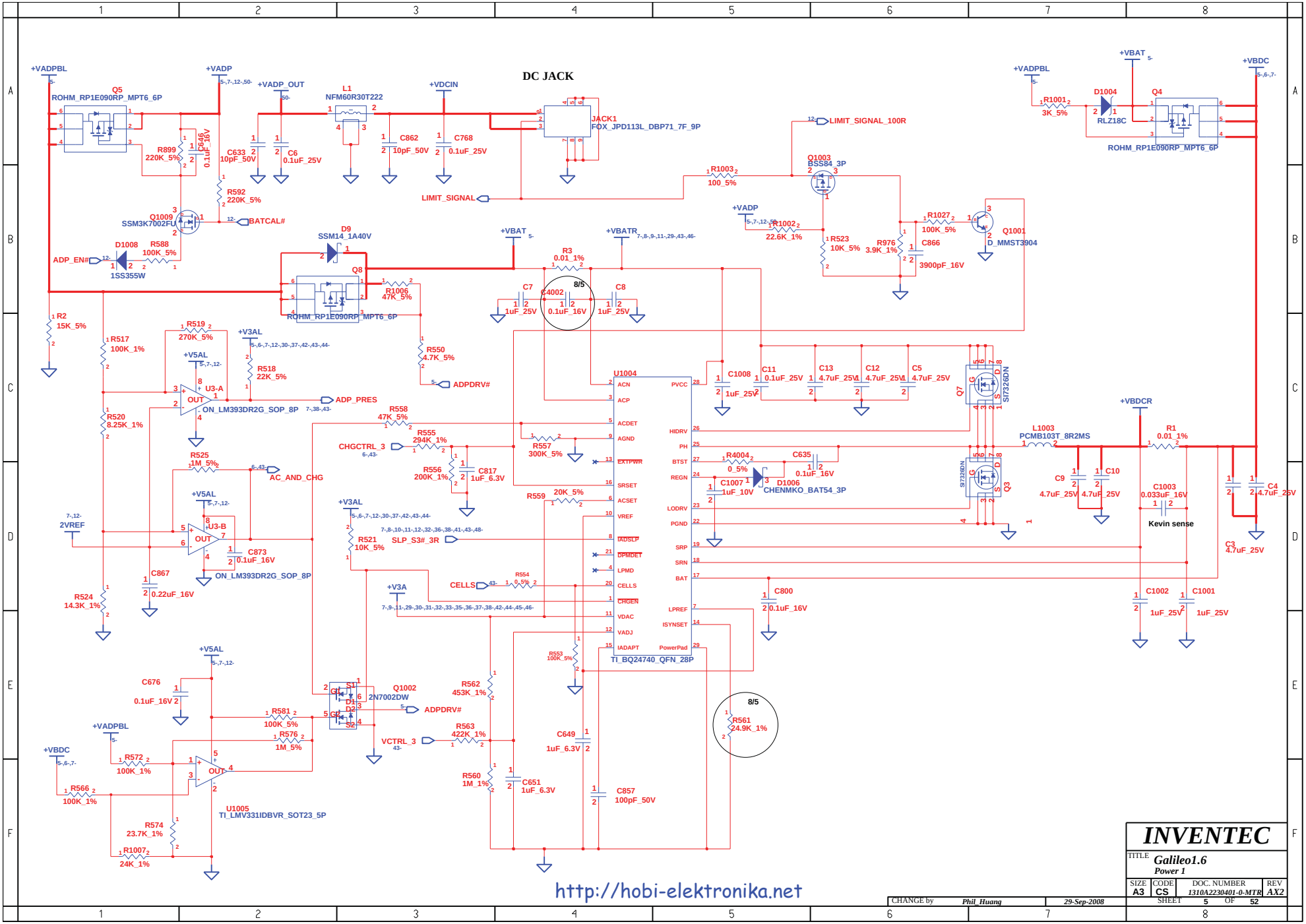
DC JACK
JACK1
FOX_JPD113L_DBP71_7F_9P
Q5
ROHM_RP1E090RP_MPT6_6P
L1
NFM60R30T222
+VADPBL
+VADP
+VADP_OUT
+VDCIN
+VBAT
+VBATR
+VBDC
+VBDCR
+V3AL
+V5AL
+V3A
LIMIT_SIGNAL
LIMIT_SIGNAL_100R
BATCAL#
ADP_EN#
ADP_PRES
ADPDRV#
AC_AND_CHG
CHGCTRL_3
SLP_S3#_3R
CELLS
VCTRL_3
2VREF
Q1009
SSM3K7002FU
D1008
1SS355W
R588
100K_5%
D9
SSM14_1A40V
Q8
R1006
47K_5%
R3
0.01_1%
C7
1uF_25V
C4002
0.1uF_16V
C8
1uF_25V
8/5
Q1003
BSS84_3P
R1003
100_5%
R1002
22.6K_1%
R523
10K_5%
R976
3.9K_1%
C866
3900pF_16V
R1027
100K_5%
Q1001
D_MMST3904
R1001
3K_5%
D1004
RLZ18C
Q4
ROHM_RP1E090RP_MPT6_6P
U1004
TI_BQ24740_QFN_28P
ACN
ACP
ACDET
AGND
EXTPWR
SRSET
ACSET
VREF
IADSLP
DPMDET
LPMD
CELLS
CHGEN
VDAC
VADJ
IADAPT
PVCC
HIDRV
PH
BTST
REGN
LODRV
PGND
SRP
SRN
BAT
LPREF
ISYNSET
PowerPad
C1008
1uF_25V
C11
0.1uF_25V
C13
4.7uF_25V
C12
4.7uF_25V
C5
4.7uF_25V
Q7
SI7326DN
Q3
SI7326DN
L1003
PCMB103T_8R2MS
R1
0.01_1%
C9
4.7uF_25V
C10
4.7uF_25V
C1003
0.033uF_16V
Kevin sense
C4
4.7uF_25V
C3
4.7uF_25V
C1002
1uF_25V
C1001
1uF_25V
R4004
0_5%
C635
0.1uF_16V
D1006
CHENMKO_BAT54_3P
C1007
1uF_10V
C800
0.1uF_16V
R558
47K_5%
R555
294K_1%
R557
300K_5%
R556
200K_1%
C817
1uF_6.3V
R559
20K_5%
R554
0_5%
R553
100K_5%
R562
453K_1%
R563
422K_1%
R560
1M_1%
C651
1uF_6.3V
C649
1uF_6.3V
C857
100pF_50V
R561
24.9K_1%
R519
270K_5%
R518
22K_5%
R550
4.7K_5%
U3-A
ON_LM393DR2G_SOP_8P
U3-B
ON_LM393DR2G_SOP_8P
R525
1M_5%
R520
8.25K_1%
R517
100K_1%
R2
15K_5%
R524
14.3K_1%
C867
0.22uF_16V
C873
0.1uF_16V
R521
10K_5%
C676
0.1uF_16V
Q1002
2N7002DW
R581
100K_5%
R576
1M_5%
R572
100K_1%
R566
100K_1%
U1005
TI_LMV331IDBVR_SOT23_5P
R574
23.7K_1%
R1007
24K_1%
R899
220K_5%
C646
0.1uF_16V
R592
220K_5%
C633
10pF_50V
C6
0.1uF_25V
C862
10pF_50V
C768
0.1uF_25V
Kevin sense
INVENTEC
TITLE
Galileo1.6
Power 1
SIZE A3
CODE CS
DOC. NUMBER 1310A2230401-0-MTR
REV AX2
SHEET 5 OF 52
CHANGE by Phil_Huang
29-Sep-2008
http://hobi-elektronika.net

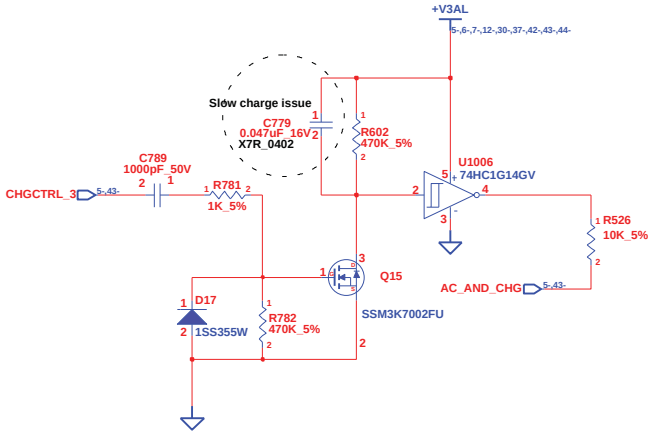

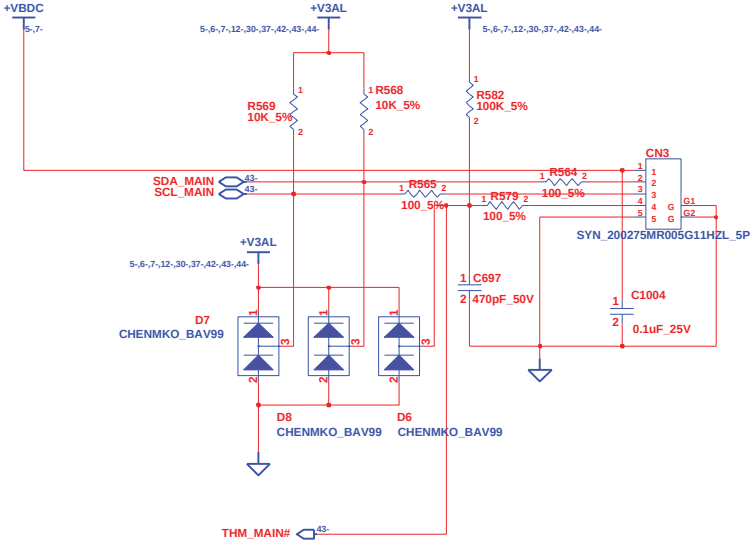

http://hobi-elektronika.net

CHANGE by	Phil_Huang	29-Sep-2008	

INVENTEC

TITLE: *Galileo1.6*
Power 2

SIZE	CODE	DOC. NUMBER	REV
A3	CS	1310A2230401-0-MTR	AX2

SHEET 6 OF 52

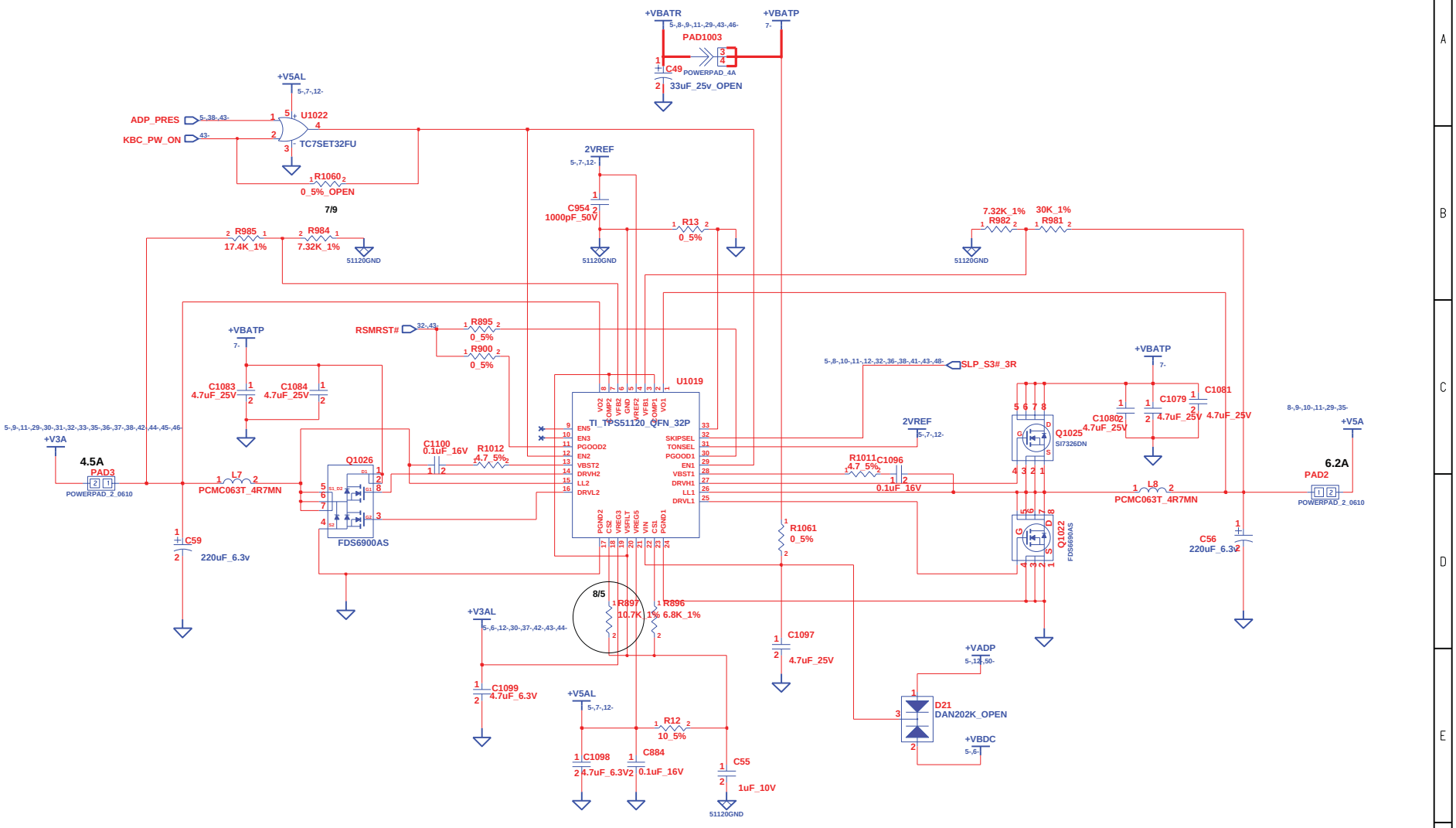

http://hobi-elektronika.net

CHANGE by	Phil_Huang	29-Sep-2008	

INVENTEC

TITLE: *Galileo1.6*
Power 3

SIZE	CODE	DOC. NUMBER	REV
A3	CS	1310A2230401-0-MTR	AX2

SHEET 7 OF 52

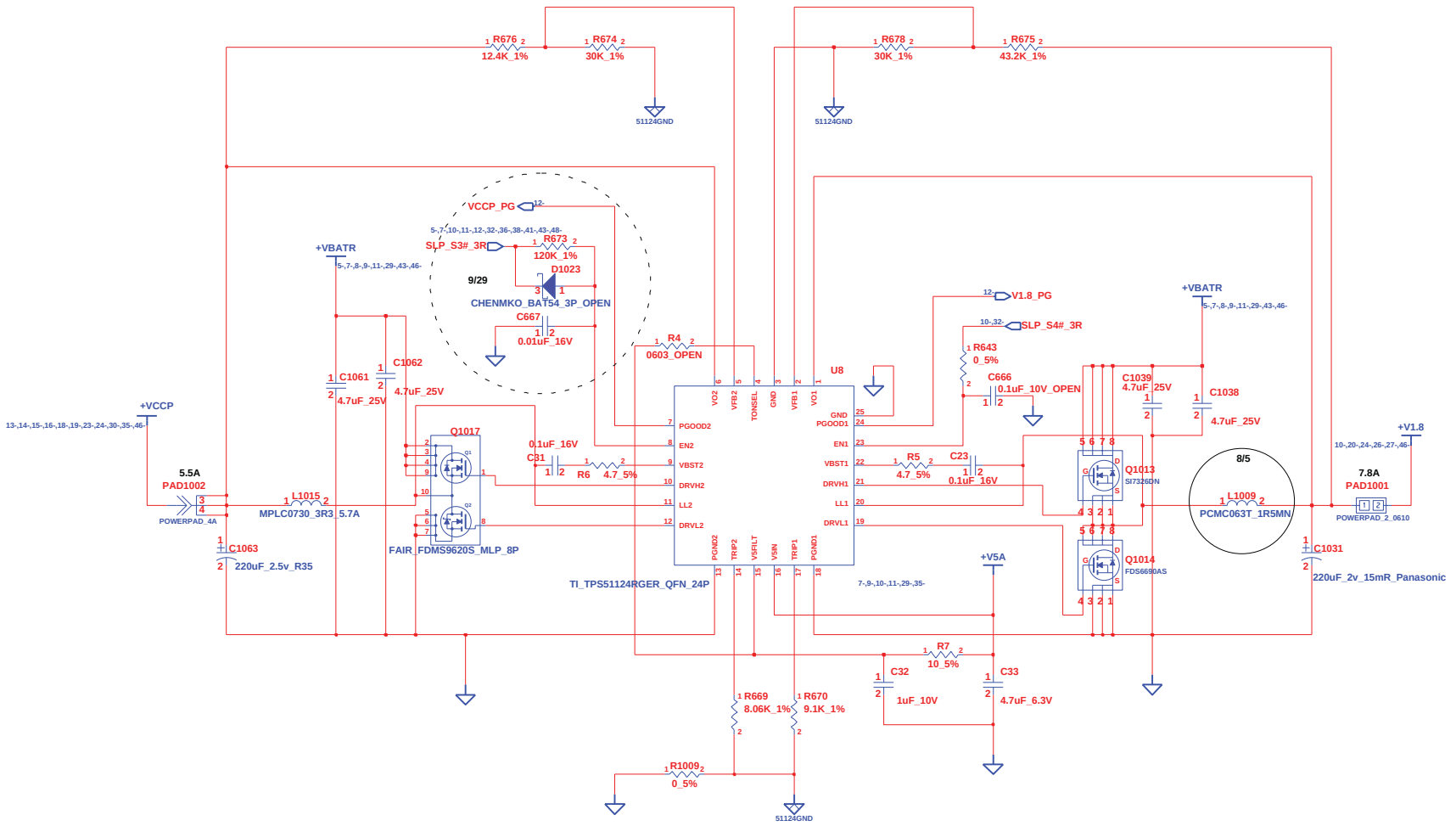

http://hobi-elektronika.net

INVENTEC			
TITLE Galileo1.6 Power 4			
SIZE A3	CODE CS	DOC. NUMBER 1310A2230401-0-MTR	REV AX2
CHANGE by Phil_Huang	29-Sep-2008	SHEET 8 OF 52	

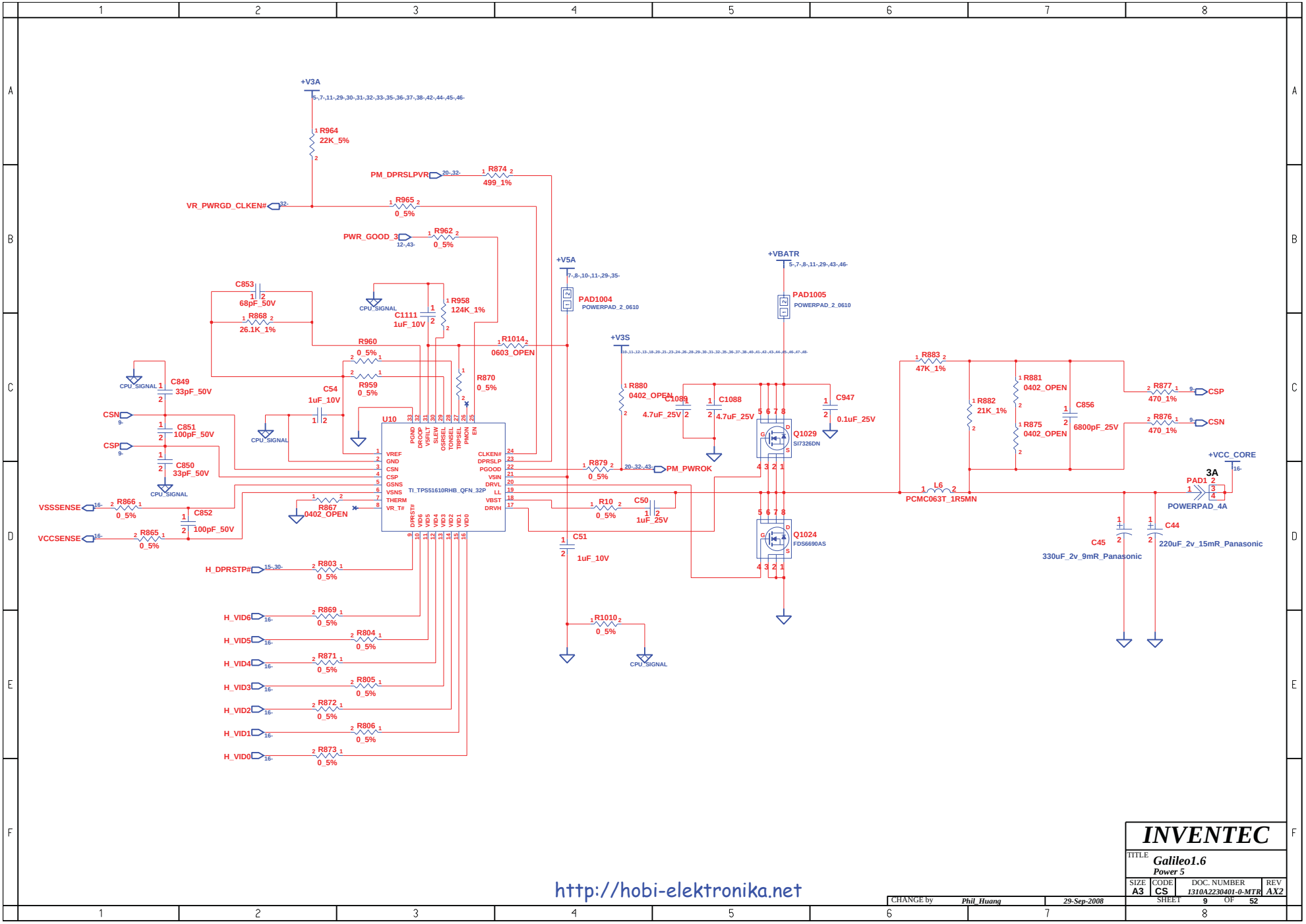

http://hobi-elektronika.net

INVENTEC			
TITLE: Galileo1.6 Power 5			
SIZE A3	CODE CS	DOC. NUMBER 1310A2230401-0-MTR	REV AX2
CHANGE by Phil_Huang	29-Sep-2008	SHEET 9 OF 52	

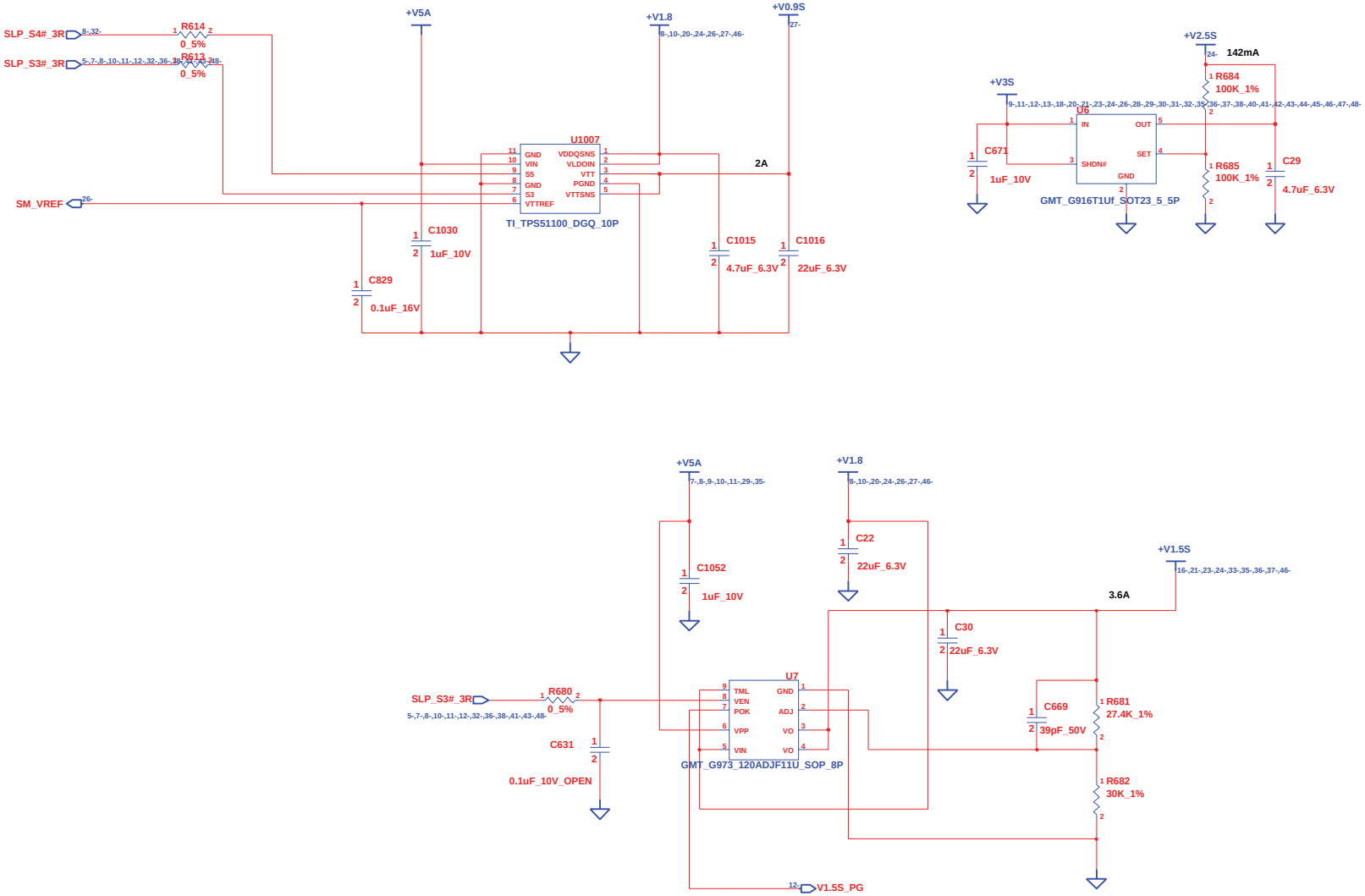

http://hobi-elektronika.net

CHANGE by	Phil_Huang	29-Sep-2008	

INVENTEC

TITLE: *Galileo1.6*
Power 6

SIZE	CODE	DOC. NUMBER	REV
A3	CS	1310A2230401-0-MTR	AX2

SHEET 10 OF 52

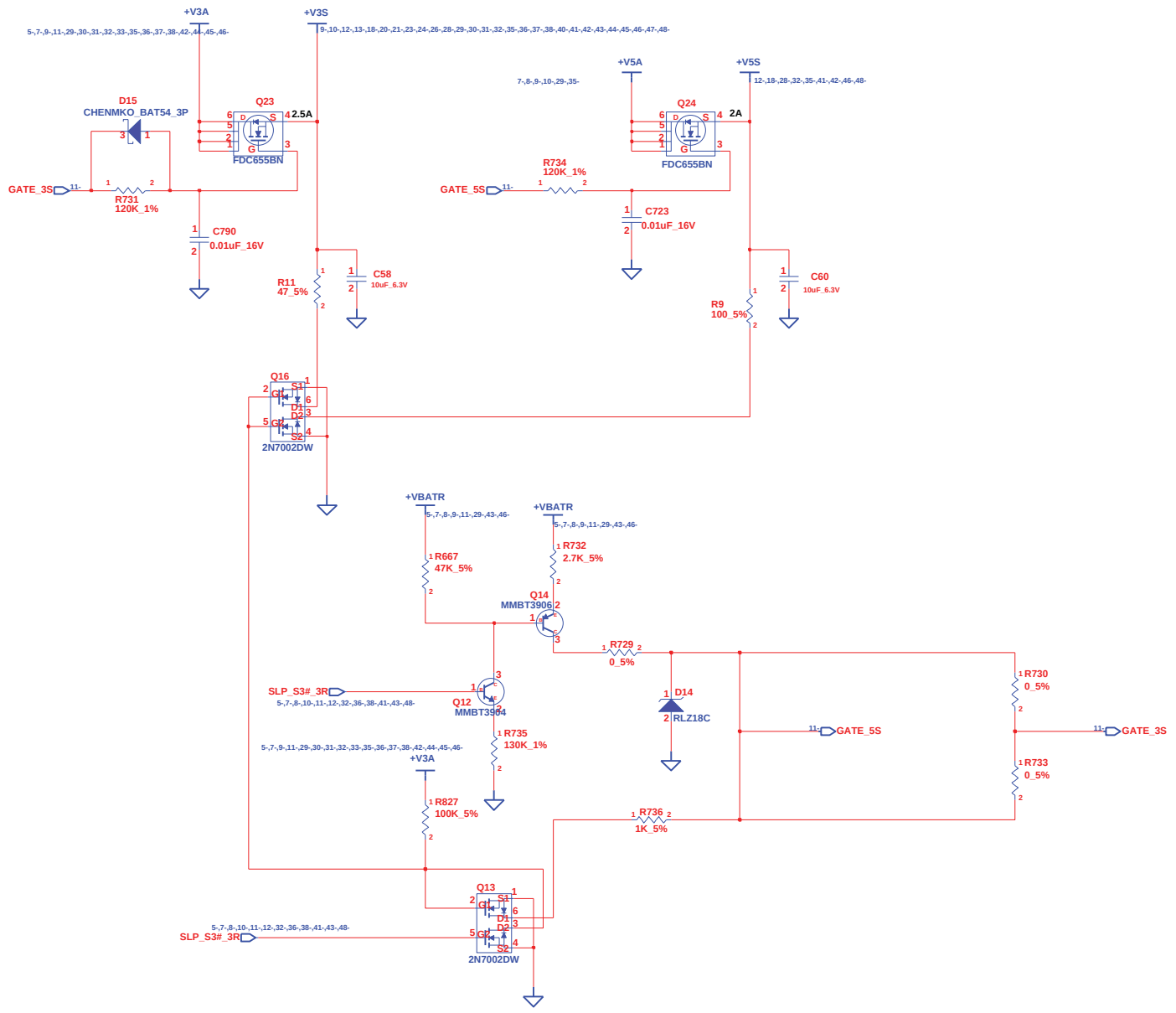

http://hobi-elektronika.net

CHANGE by	Phil_Huang	29-Sep-2008	

INVENTEC

TITLE *Galileo1.6*
Power 8

SIZE	CODE	DOC. NUMBER	REV
A3	CS	1310A2230401-0-MTR	AX2

SHEET 11 OF 52

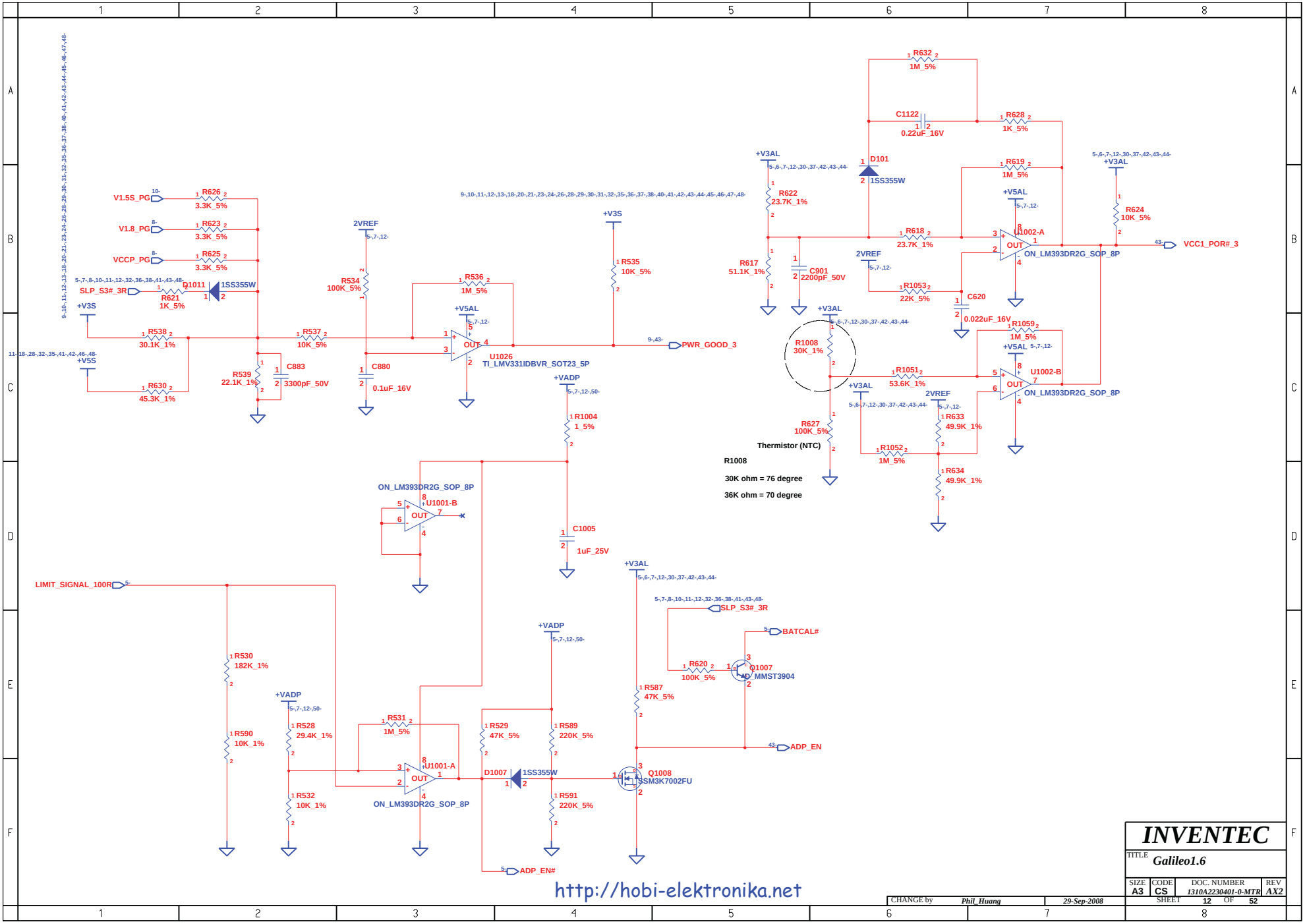

INVENTEC			
TITLE Galileo1.6			
SIZE A3	CODE CS	DOC. NUMBER 1310A2230401-0-MTR	REV AX2
CHANGE by Phil_Huang	29-Sep-2008	SHEET 12 OF 52	

CLKBSEL0	CLKBSEL1	CLKBSEL2	CPU MHZ
1	0	1	100MHZ
1	0	0	133MHZ
1	1	0	167MHZ
0	1	0	200MHZ

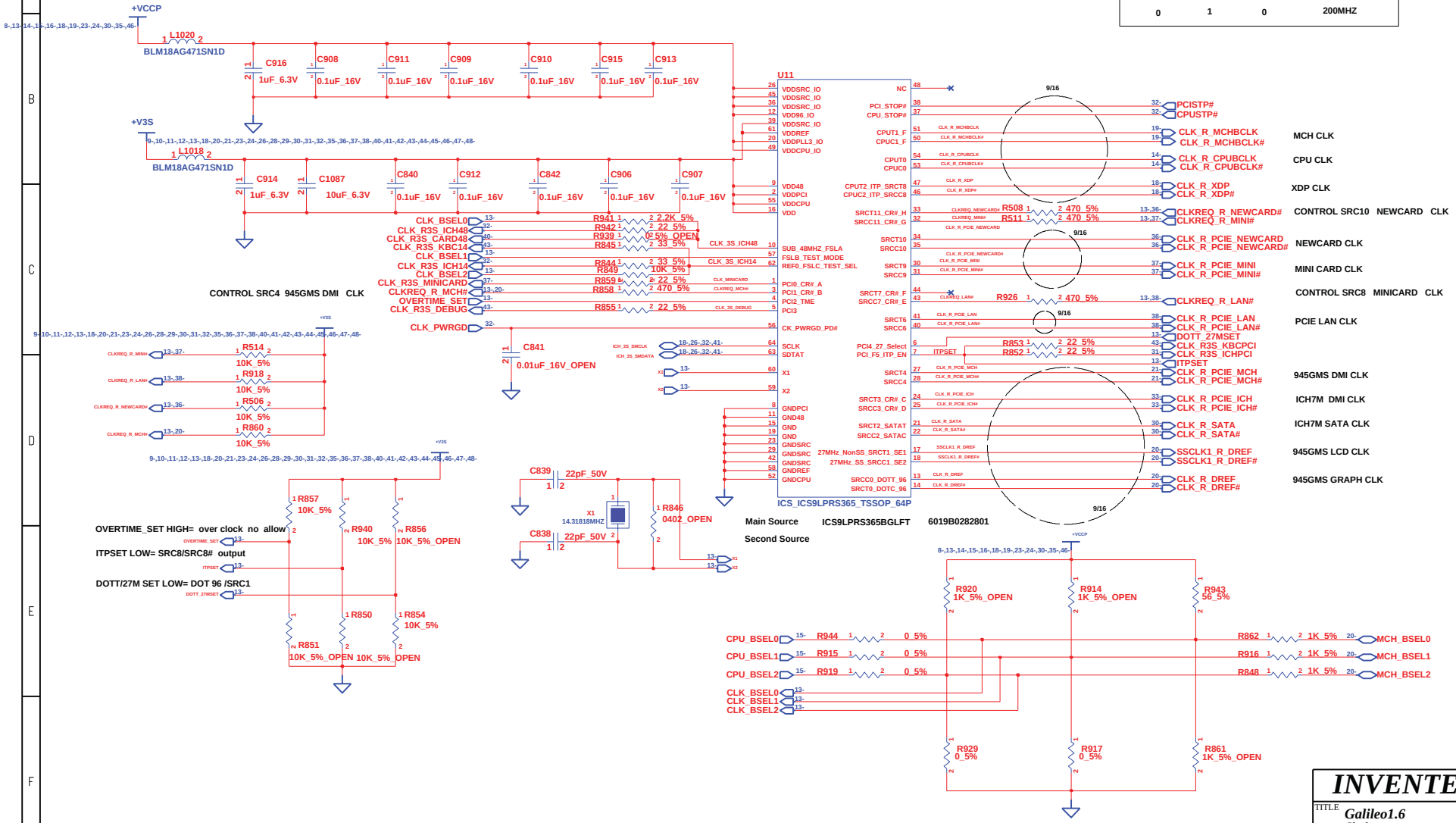

http://hobi-elektronika.net

CHANGE by	Phil_Huang	29-Sep-2008	

INVENTEC

TITLE: Galileo1.6 Clock

SIZE	CODE	DOC. NUMBER	REV
A3	CS	1310A2230401-0-MTR	AX2

SHEET 13 OF 52

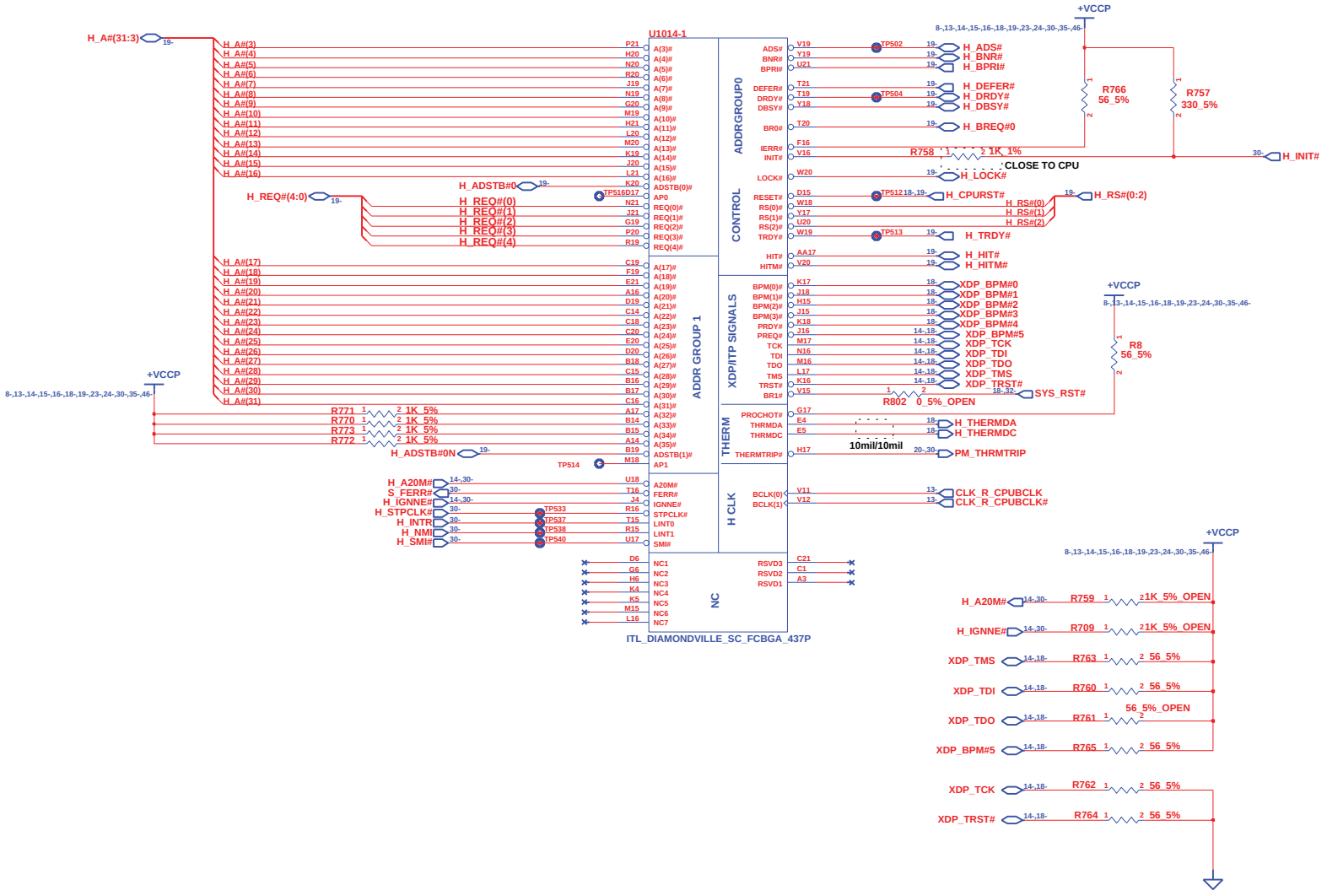

http://hobi-elektronika.net

CHANGE by	Phil_Huang	29-Sep-2008	

INVENTEC

TITLE: *Galileo1.6*
ATOM-1

SIZE	CODE	DOC. NUMBER	REV
A3	CS	1310A2230401-0-MTR	AX2

SHEET 14 OF 52

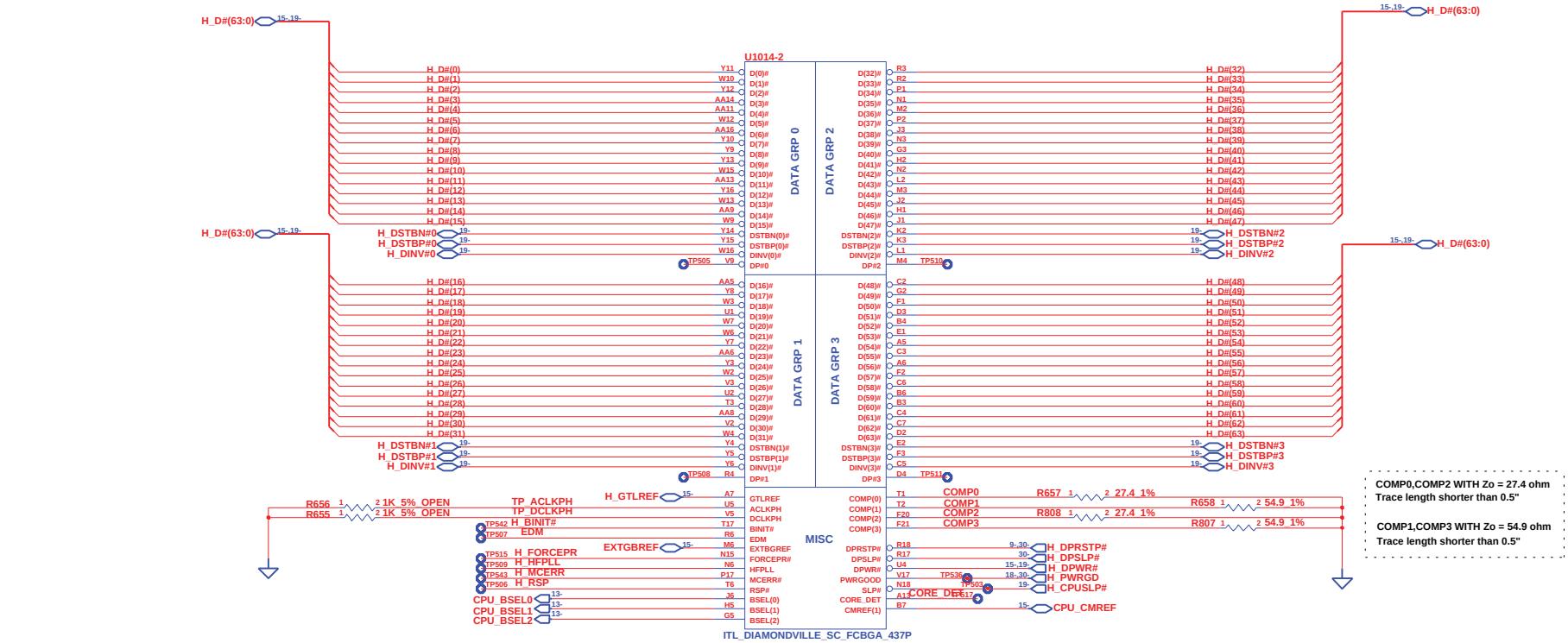

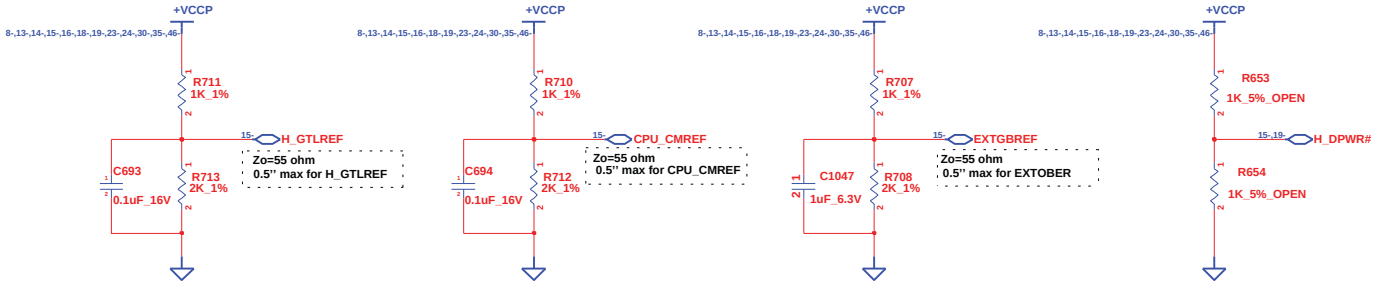

http://hobi-elektronika.net

CHANGE by	Phil_Huang	29-Sep-2008	

INVENTEC

TITLE *Galileo1.6*
ATOM-2

SIZE	CODE	DOC. NUMBER	REV
A3	CS	1310A2230401-0-MTR	AX2

SHEET 15 OF 52

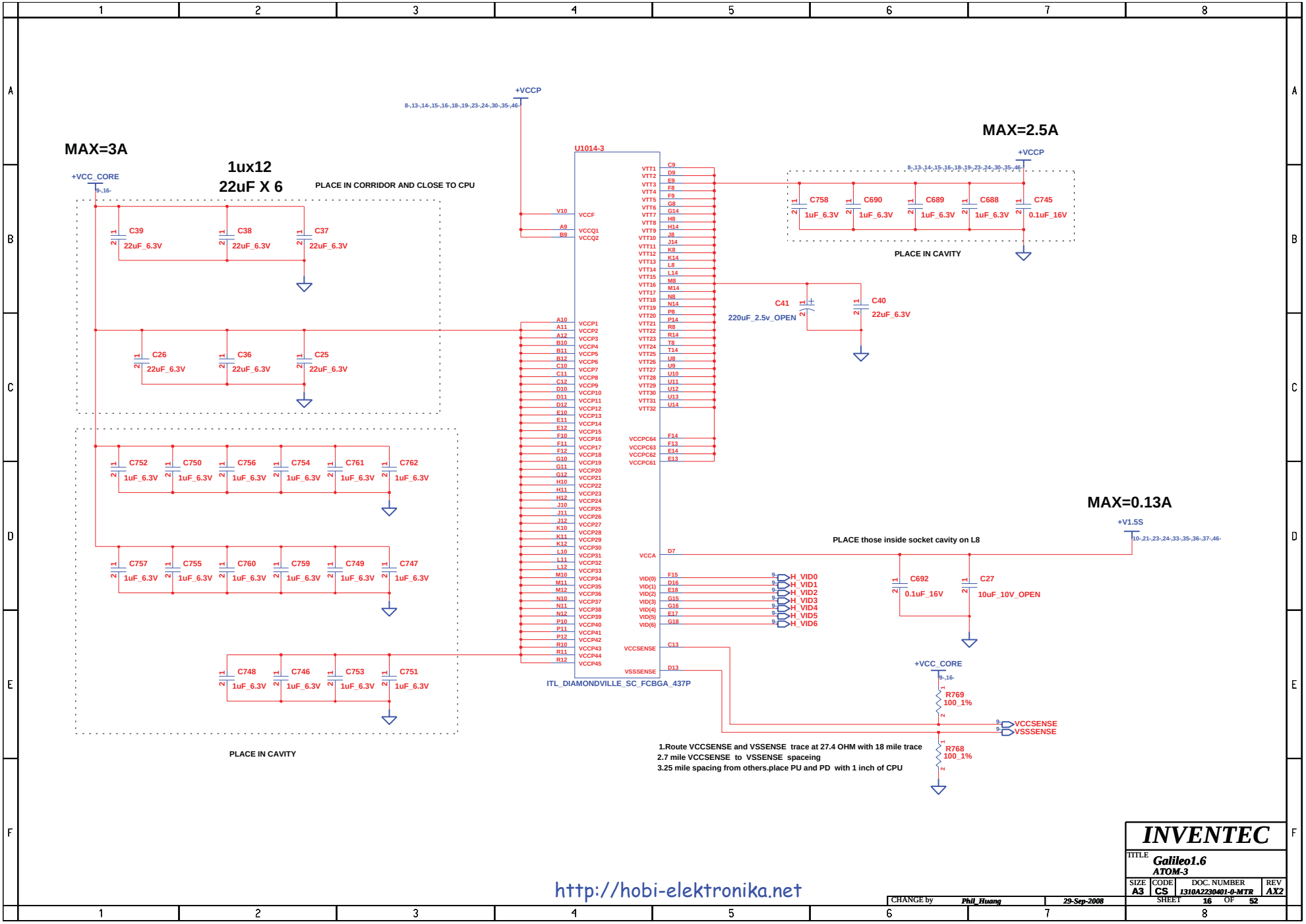

http://hobi-elektronika.net

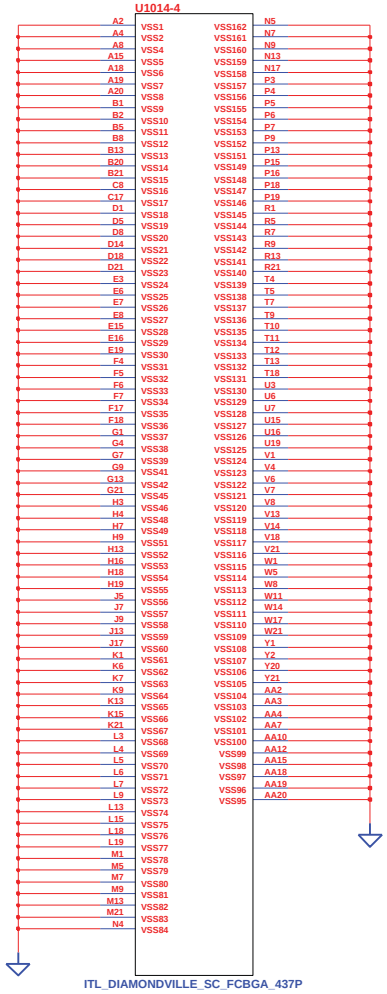

http://hobi-elektronika.net

CHANGE by	Phil_Huang	29-Sep-2008	

INVENTEC

TITLE *Galileo1.6*
ATOM-4

SIZE	CODE	DOC. NUMBER	REV
A3	CS	1310A2230401-0-MTR	AX2

SHEET 17 OF 52

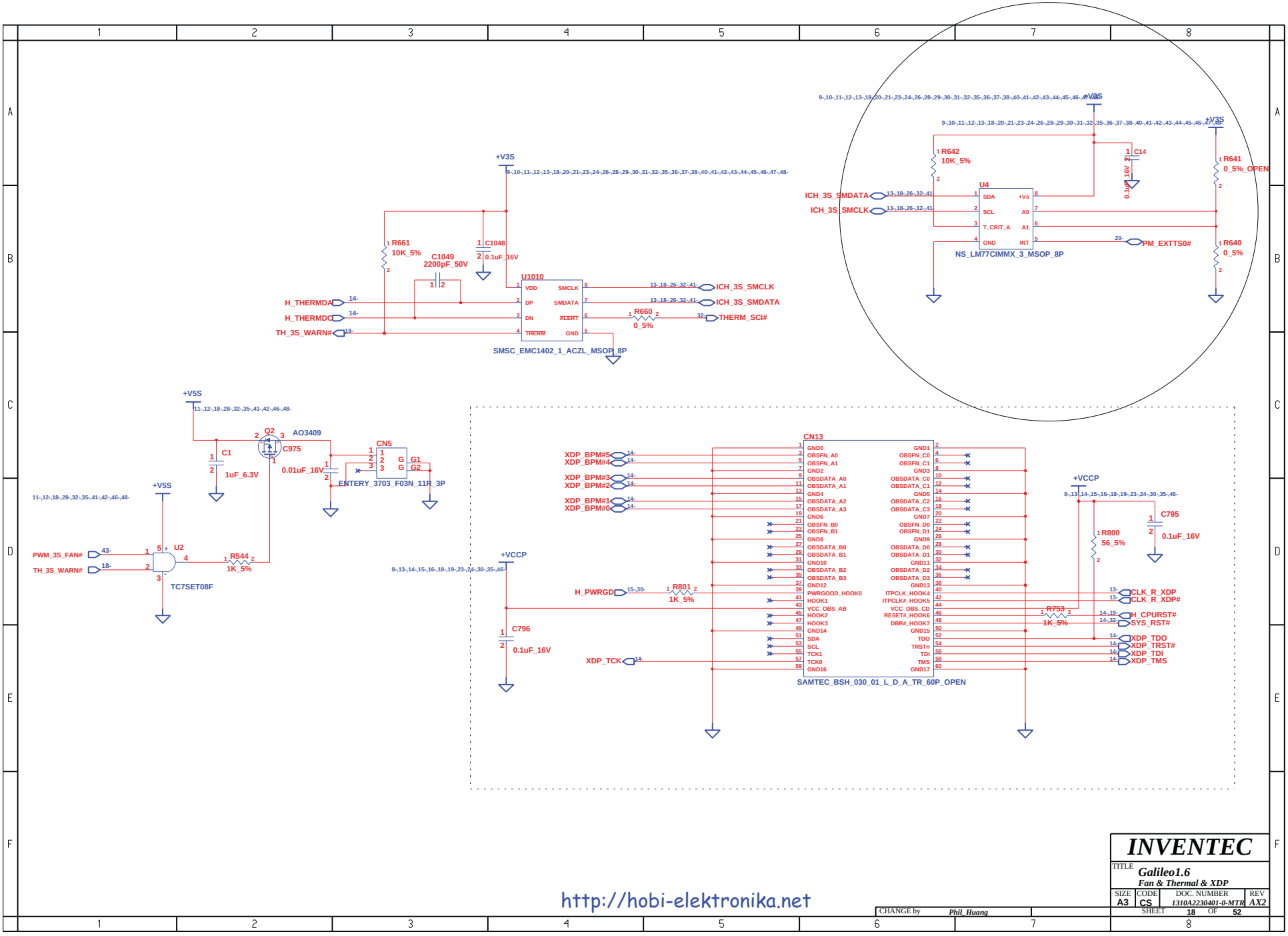

http://hobi-elektronika.net

INVENTEC			
TITLE: Galileo1.6 Fan & Thermal & XDP			
SIZE A3	CODE CS	DOC. NUMBER 1310A2230401-0-MTR	REV AX2
CHANGE by Phil_Huang		SHEET 18 OF 52	

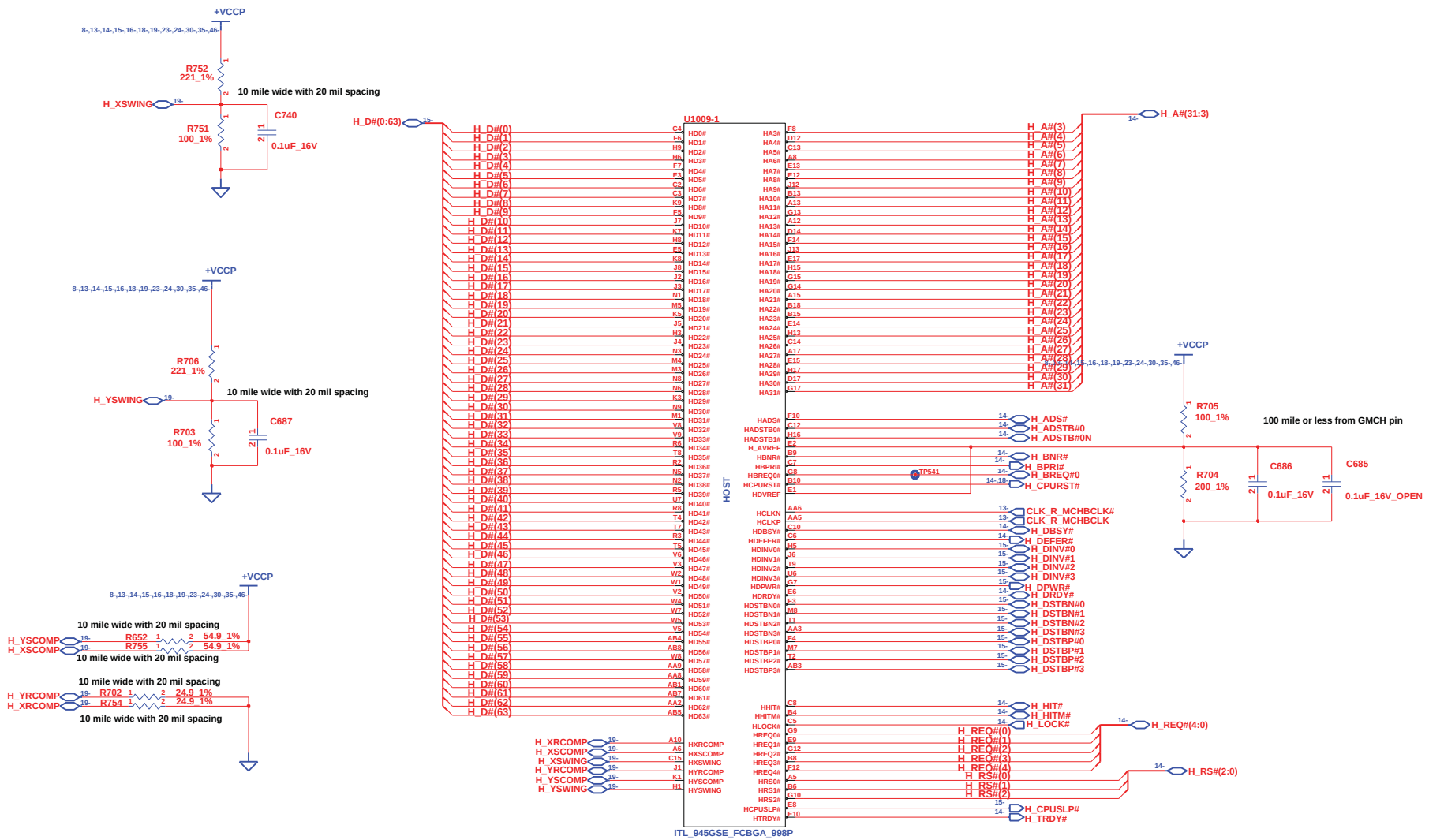

http://hobi-elektronika.net

INVENTEC			
TITLE Galileo1.6 945GSE-1			
SIZE A3	CODE CS	DOC. NUMBER 1310A2230401-0-MTR	REV AX2
CHANGE by Phil_Huang	29-Sep-2008	SHEET 19 OF 52	

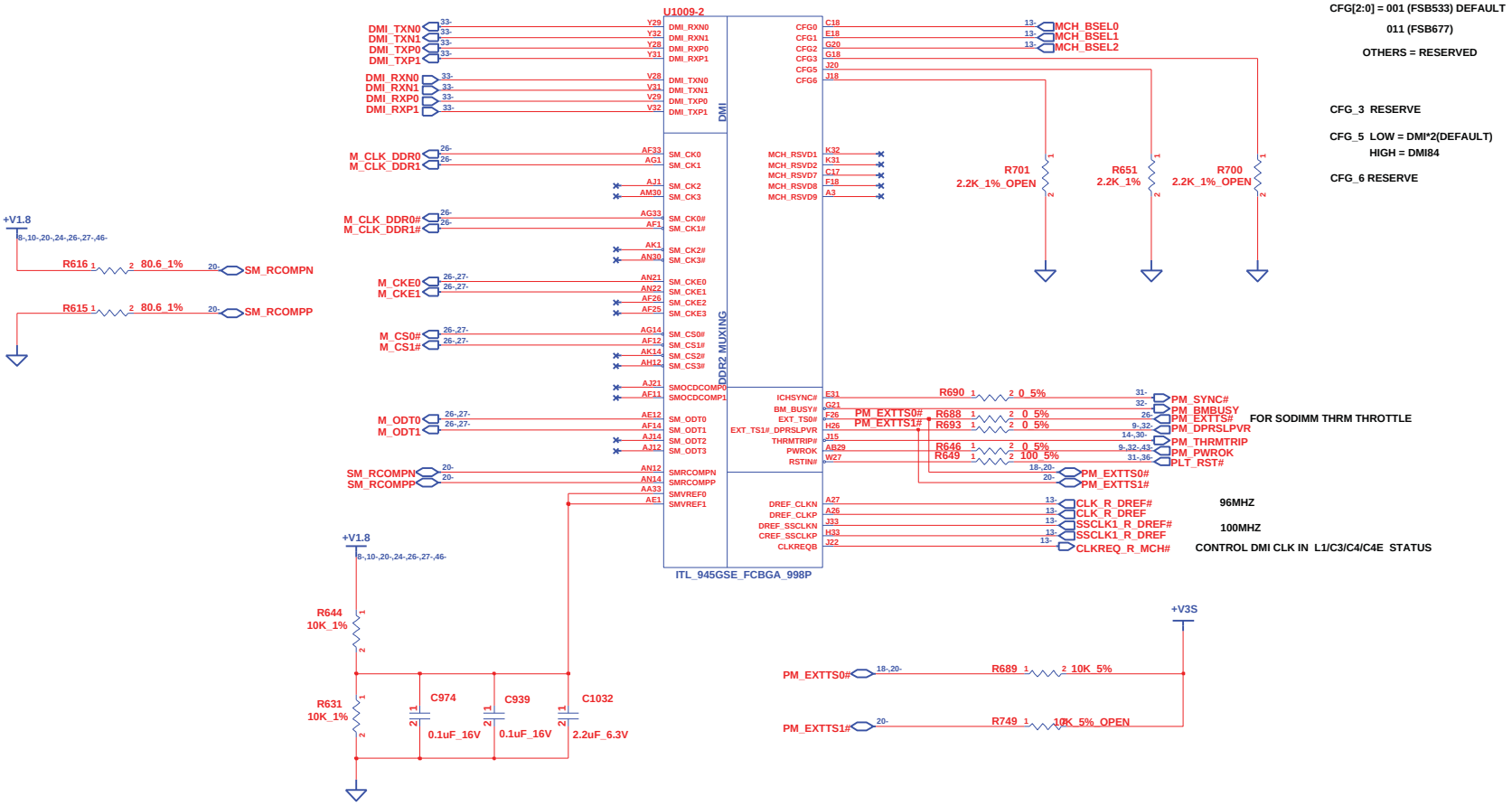

http://hobi-elektronika.net

INVENTEC			
TITLE Galileo1.6 945GSE-2			
SIZE A3	CODE CS	DOC. NUMBER 1310A2230401-0-MTR	REV AX2
CHANGE by Phil_Huang	29-Sep-2008	SHEET 20 OF 52	

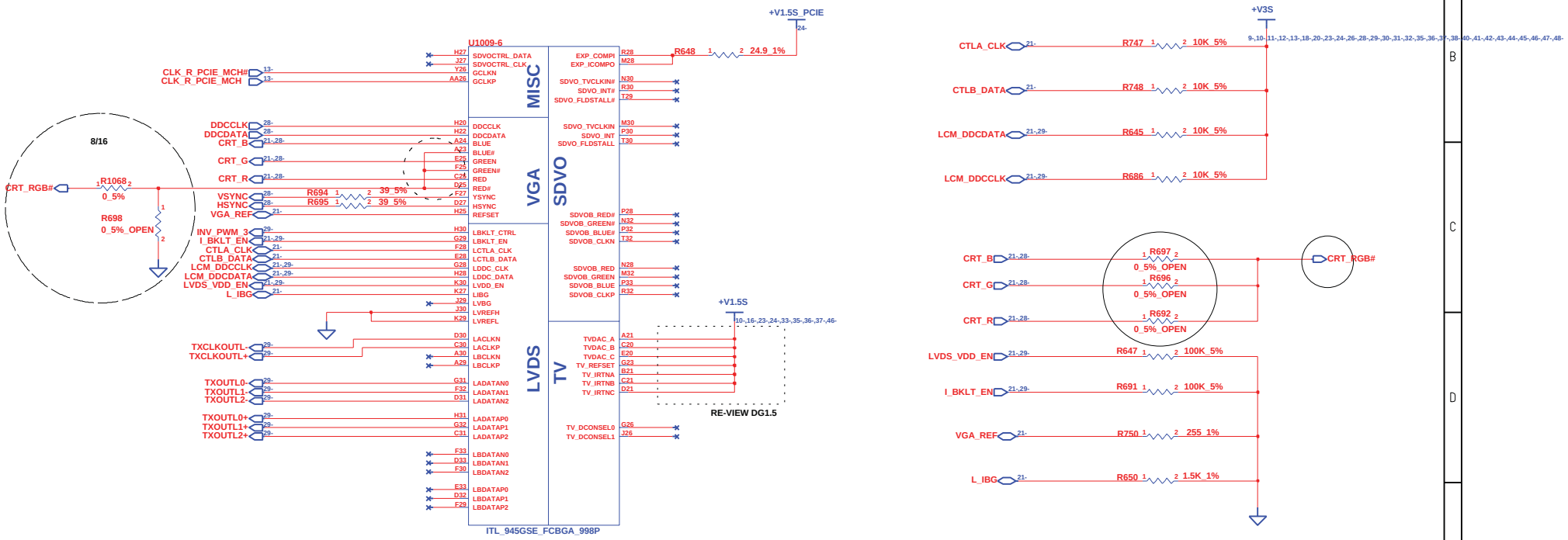

http://hobi-elektronika.net

CHANGE by	Phil_Huang	29-Sep-2008	

INVENTEC

TITLE *Galileo1.6*
945GSE-3

SIZE	CODE	DOC. NUMBER	REV
A3	CS	1310A2230401-0-MTR	AX2

SHEET 21 OF 52

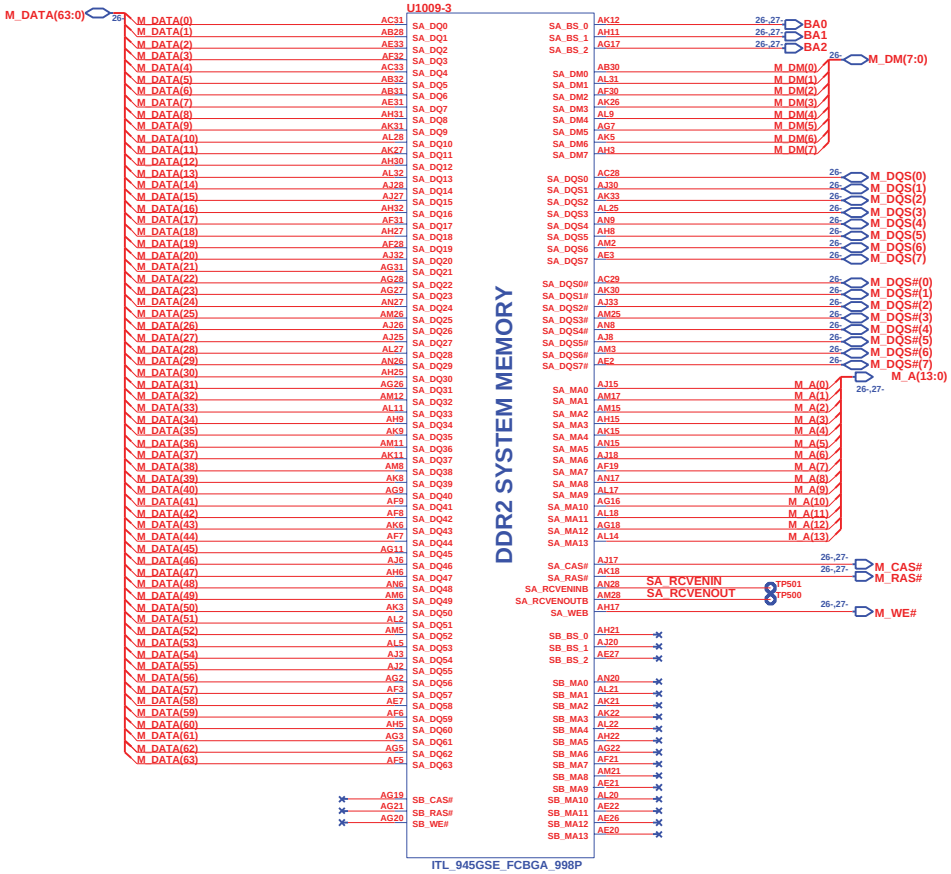

http://hobi-elektronika.net

CHANGE by	Phil_Huang	29-Sep-2008	

INVENTEC

TITLE: *Galileo1.6*
945GSE-4

SIZE	CODE	DOC. NUMBER	REV
A3	CS	1310A2230401-0-MTR	AX2

SHEET 22 OF 52

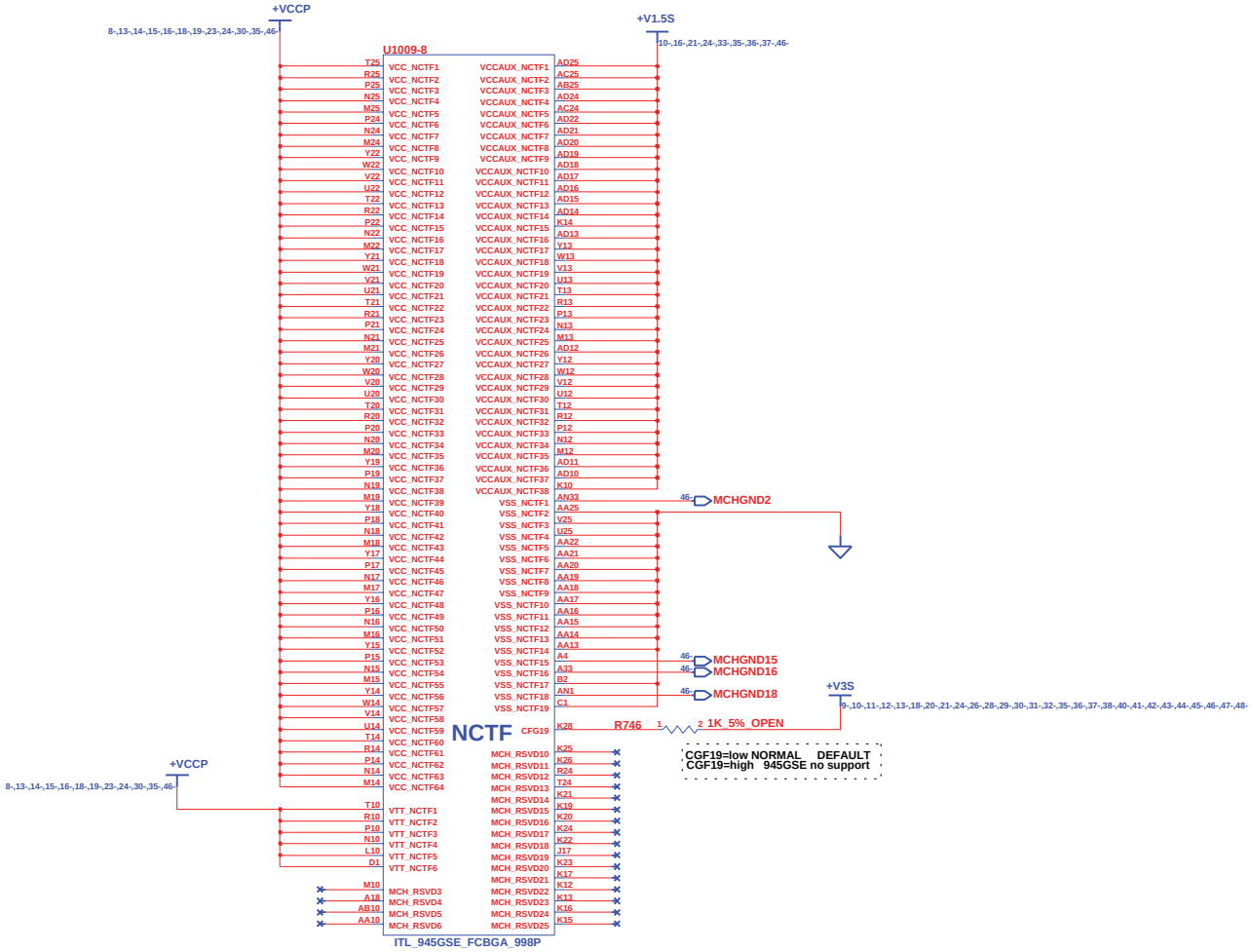

http://hobi-elektronika.net

INVENTEC			
TITLE Galileo1.6 945GSE-5			
SIZE A3	CODE CS	DOC. NUMBER 1310A2230401-0-MTR	REV AX2
CHANGE by Phil_Huang	29-Sep-2008	SHEET 23 OF 52	

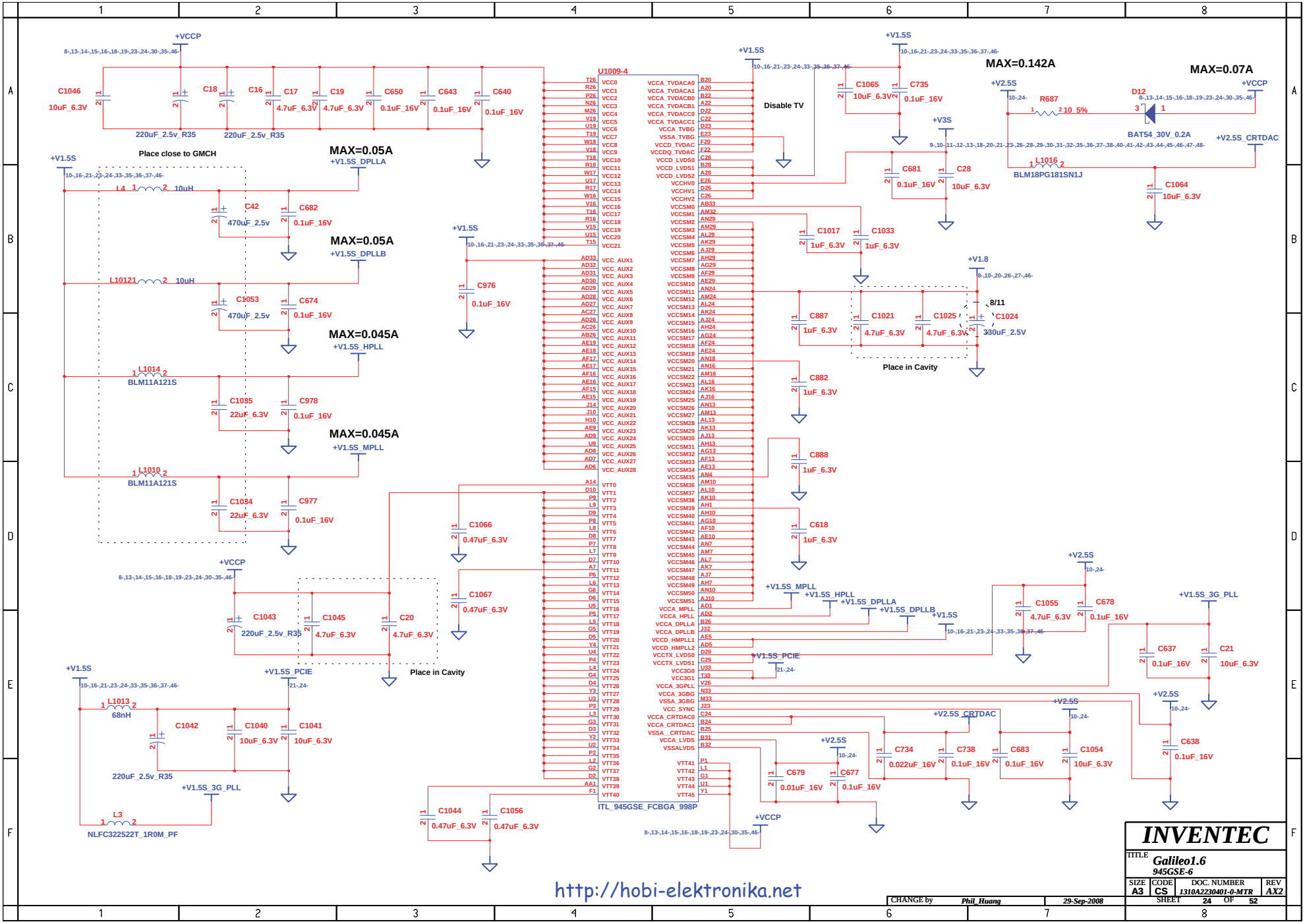
+VCCP
C1046
10uF_6.3V
C18
220uF_2.5v_R35
C16
C17
4.7uF_6.3V
C19
4.7uF_6.3V
C650
0.1uF_16V
C643
0.1uF_16V
C640
0.1uF_16V
Place close to GMCH
MAX=0.05A
+V1.5S_DPLLA
+V1.5S
L4
10uH
C42
470uF_2.5v
C682
0.1uF_16V
MAX=0.05A
+V1.5S_DPLLB
L10121
10uH
C1053
470uF_2.5v
C674
0.1uF_16V
MAX=0.045A
+V1.5S_HPLL
L1014
BLM11A121S
C1035
22uF_6.3V
C978
0.1uF_16V
MAX=0.045A
+V1.5S_MPLL
L1010
BLM11A121S
C1034
22uF_6.3V
C977
0.1uF_16V
U1009-4
ITL_945GSE_FCBGA_998P
Disable TV
C1065
10uF_6.3V
C735
0.1uF_16V
MAX=0.142A
MAX=0.07A
+V2.5S
R687
10 5%
D12
BAT54_30V_0.2A
+V2.5S_CRTDAC
L1016
BLM18PG181SN1J
C1064
10uF_6.3V
+V3S
C681
0.1uF_16V
C28
10uF_6.3V
C1017
1uF_6.3V
C1033
1uF_6.3V
+V1.8
C887
1uF_6.3V
C1021
4.7uF_6.3V
C1025
4.7uF_6.3V
C1024
330uF_2.5V
8/11
Place in Cavity
C882
1uF_6.3V
C888
1uF_6.3V
C618
1uF_6.3V
C976
0.1uF_16V
C1066
0.47uF_6.3V
C1067
0.47uF_6.3V
C1043
220uF_2.5v_R35
C1045
4.7uF_6.3V
C20
4.7uF_6.3V
Place in Cavity
+V1.5S_MPLL
+V1.5S_HPLL
+V1.5S_DPLLA
+V1.5S_DPLLB
+V1.5S_PCIE
C1055
4.7uF_6.3V
C678
0.1uF_16V
+V1.5S_3G_PLL
C637
0.1uF_16V
C21
10uF_6.3V
L1013
68nH
C1042
220uF_2.5v_R35
C1040
10uF_6.3V
C1041
10uF_6.3V
L3
NLFC322522T_1R0M_PF
C734
0.022uF_16V
C738
0.1uF_16V
C683
0.1uF_16V
C1054
10uF_6.3V
C638
0.1uF_16V
C679
0.01uF_16V
C677
0.1uF_16V
C1044
0.47uF_6.3V
C1056
0.47uF_6.3V
http://hobi-elektronika.net
INVENTEC
TITLE
Galileo1.6
945GSE-6
SIZE A3
CODE CS
DOC. NUMBER 1310A2230401-0-MTR
REV AX2
CHANGE by Phil_Huang
29-Sep-2008
SHEET 24 OF 52

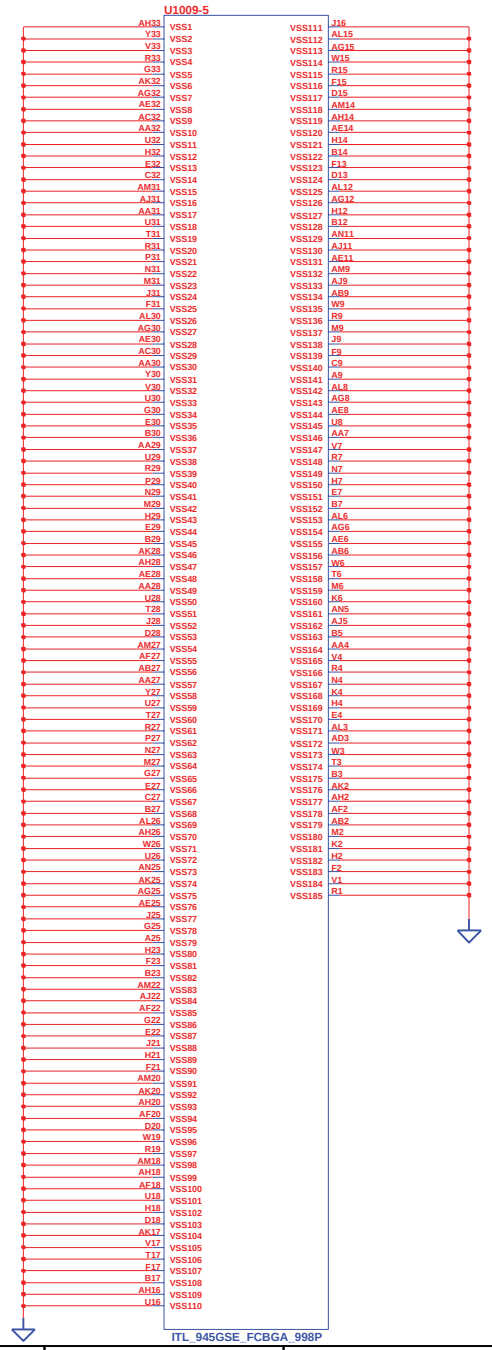

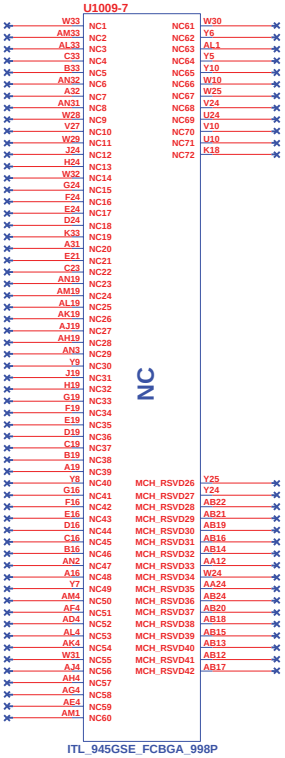

http://hobi-elektronika.net

CHANGE by	Phil_Huang	29-Sep-2008	

INVENTEC

TITLE: *Galileo1.6*
945GSE-7~8

SIZE	CODE	DOC. NUMBER	REV
A3	CS	1310A2230401-0-MTR	AX2

SHEET 25 OF 52

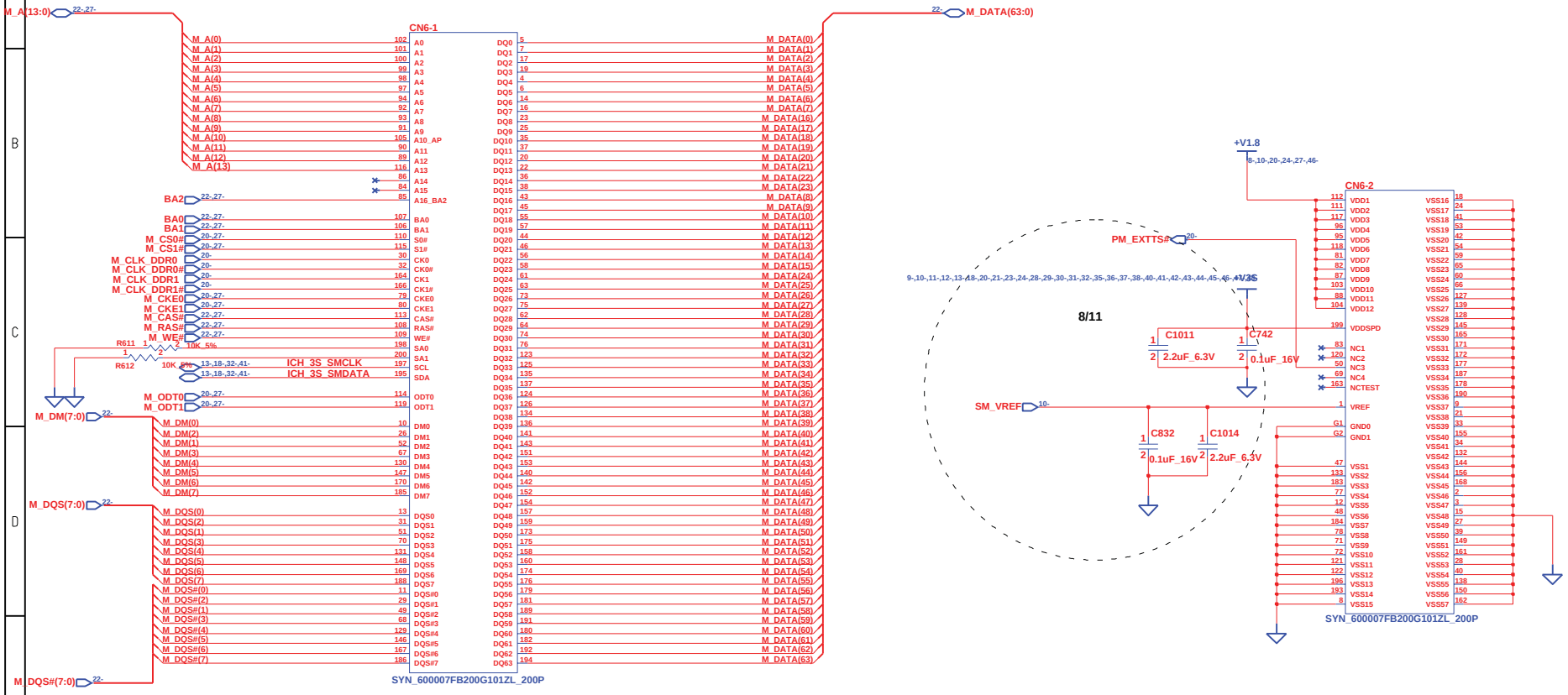

SO DIMM0

http://hobi-elektronika.net

INVENTEC			
TITLE: Galileo1.6 DDR2 DIMM0			
SIZE A3	CODE CS	DOC. NUMBER 1310A2230401-0-MTR	REV AX2
CHANGE by Phil_Huang	29-Sep-2008	SHEET 26 OF 52	

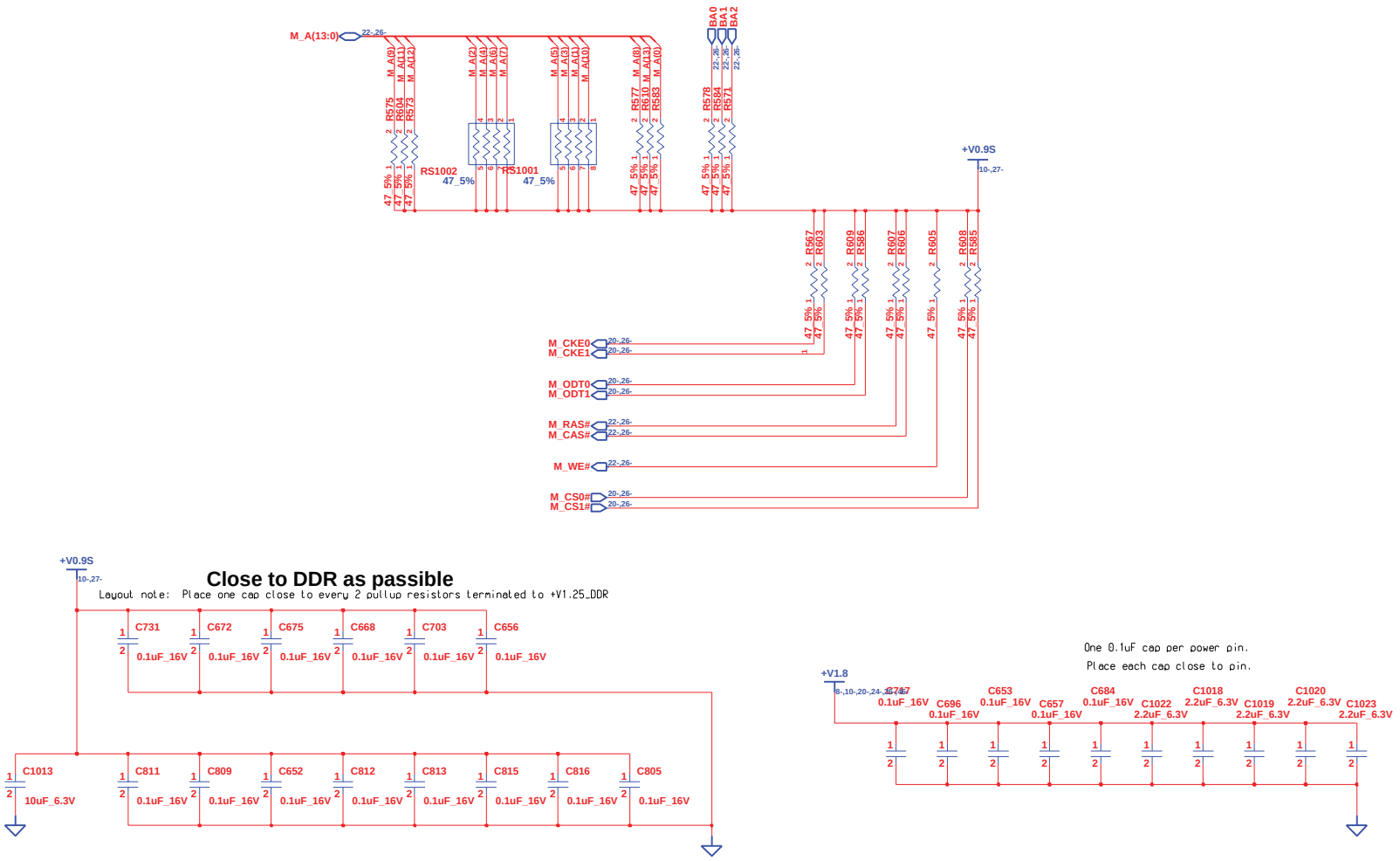

Layout note: Place capacitors between and near DDR connector if possible.

http://hobi-elektronika.net

INVENTEC			
TITLE	Galileo1.6 DDR2 PULL UP TERMINATOR		
SIZE A3	CODE CS	DOC. NUMBER 1310A2230401-0-MTR	REV AX2
CHANGE by Phil_Huang	29-Sep-2008	SHEET 27 OF 52	

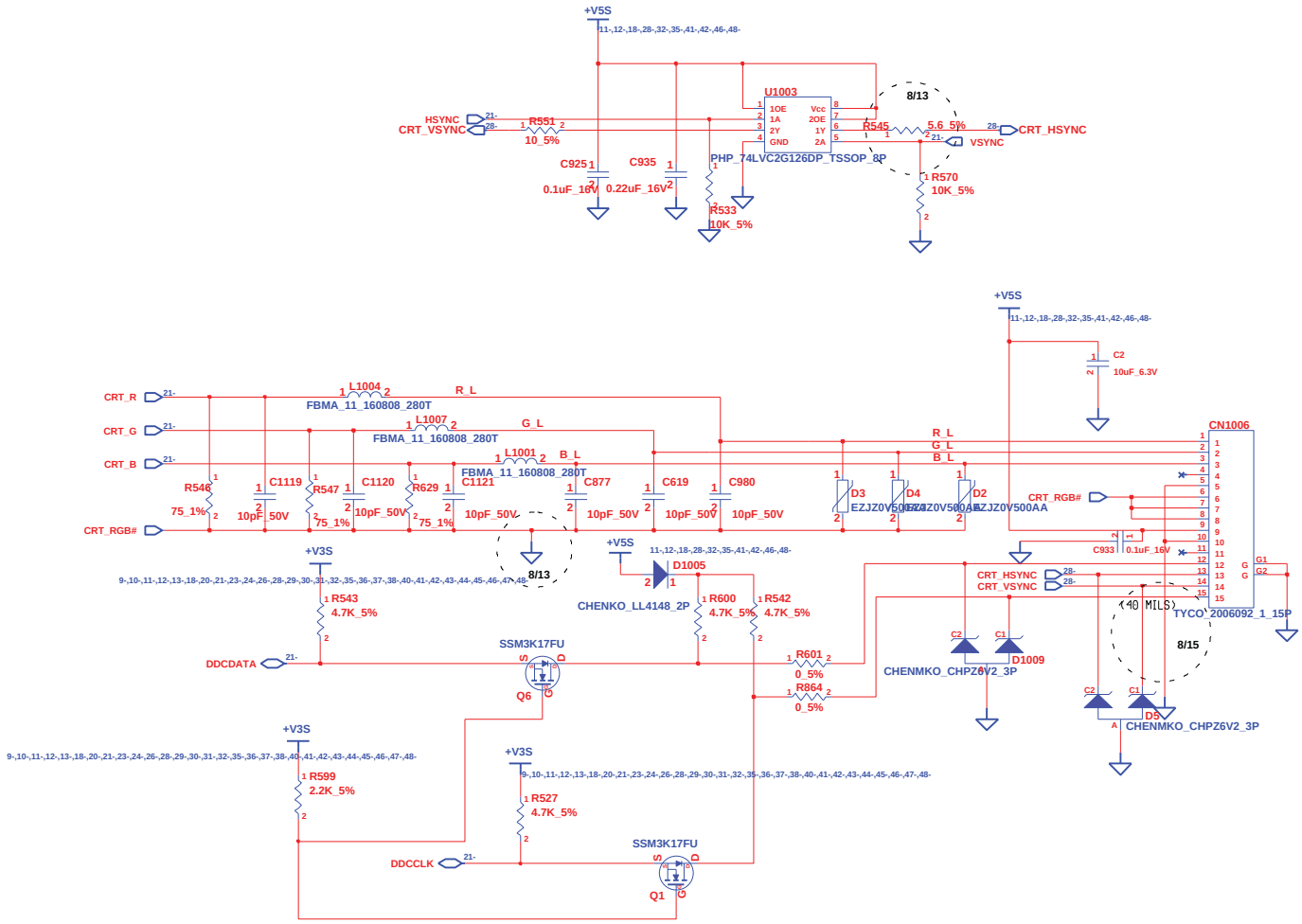

http://hobi-elektronika.net

CHANGE by	Phil_Huang	29-Sep-2008	

INVENTEC

TITLE: Galileo1.6 CRT

SIZE	CODE	DOC. NUMBER	REV
A3	CS	1310A2230401-0-MTR	AX2

SHEET 28 OF 52

Webcam CONN

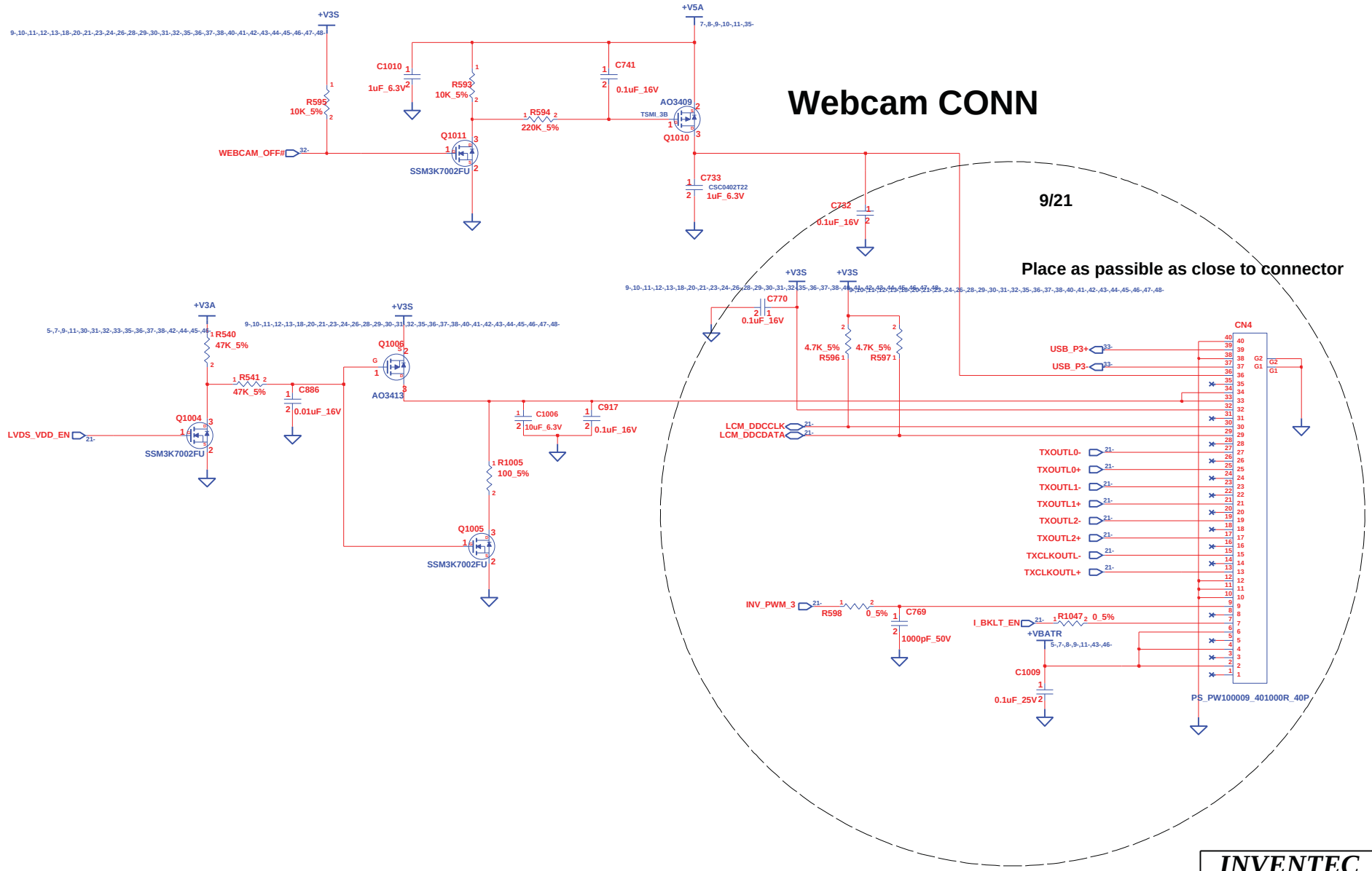

http://hobi-elektronika.net

INVENTEC			
TITLE	Galileo1.6 LCM & WEBCAM CONN		
SIZE A3	CODE CS	DOC. NUMBER 1310A2230401-0-MTR	REV AX2
CHANGE by Phil_Huang	29-Sep-2008	SHEET 29 OF 52	

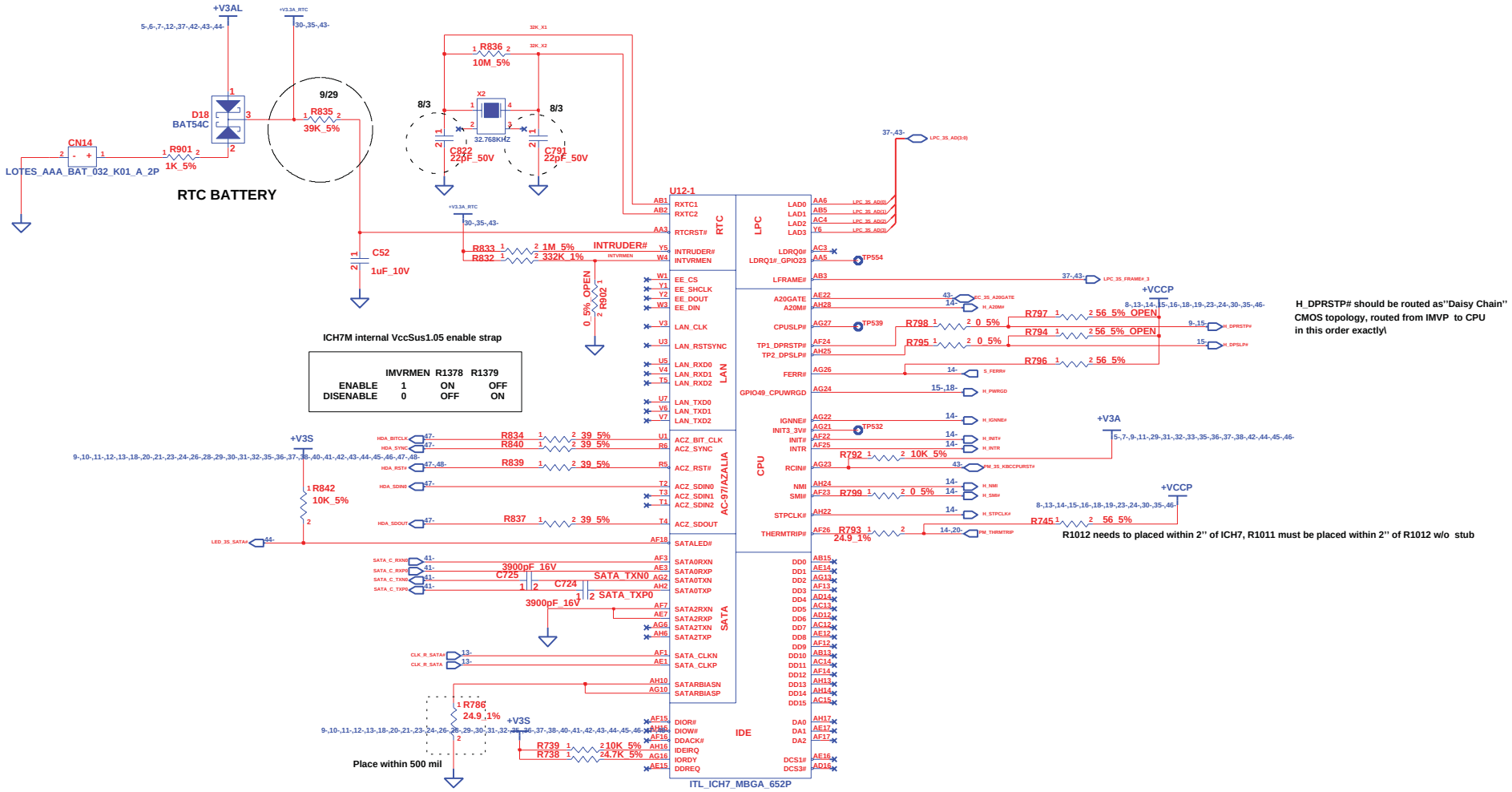

http://hobi-elektronika.net

CHANGE by	Phil_Huang	29-Sep-2008	

INVENTEC

TITLE: Galileo1.6 ICH7-1

SIZE	CODE	DOC. NUMBER	REV
A3	CS	1310A2230401-0-MTR	AX2

SHEET 30 OF 52

ICH7 Boot BIOS select

	STRAP	GNT5#	GNT4#
LPC	11	HIGH	HIGH
PCI	10	HIGH	LOW
SPI	01	LOW	HIGH

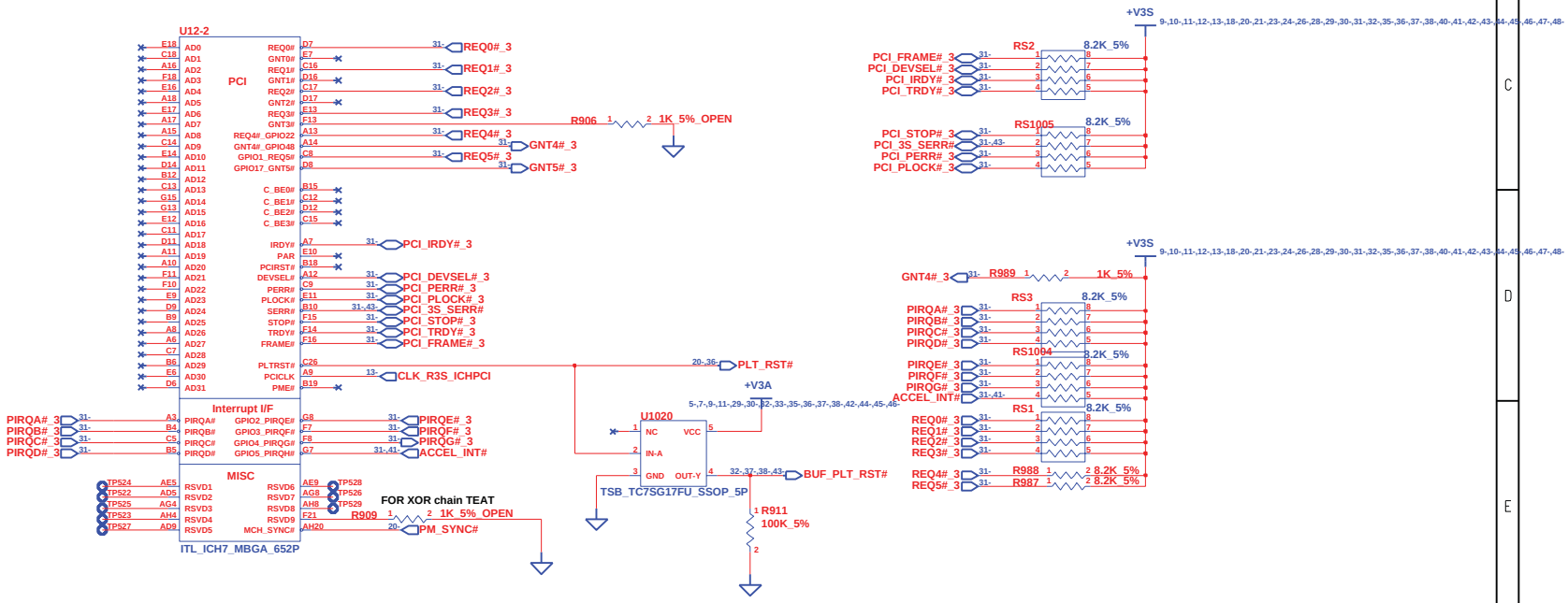

http://hobi-elektronika.net

CHANGE by	Phil_Huang	29-Sep-2008	

INVENTEC

TITLE Galileo1.6
ICH7-2

SIZE	CODE	DOC. NUMBER	REV
A3	CS	1310A2230401-0-MTR	AX2

SHEET 31 OF 52

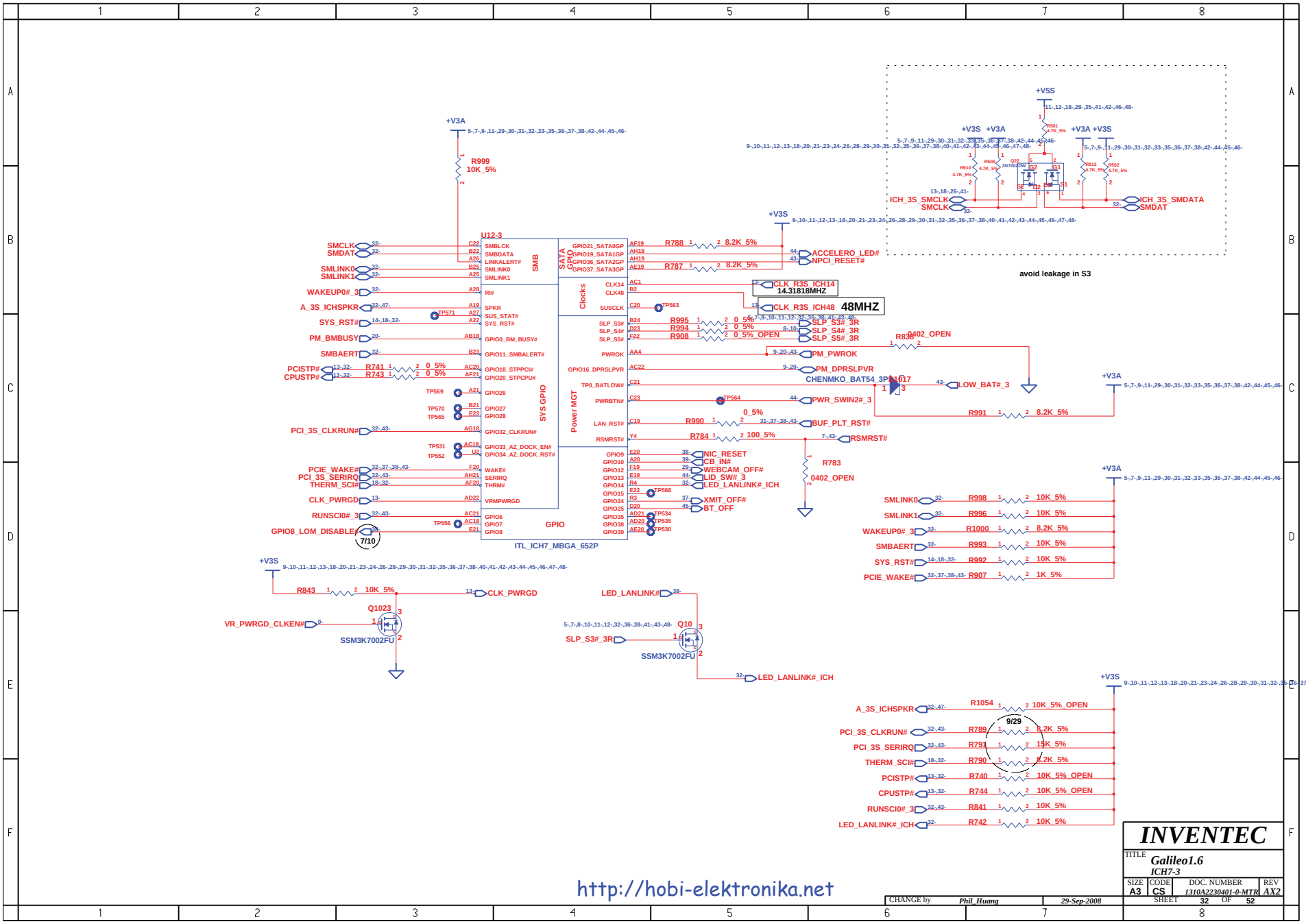
U12-3
ITL_ICH7_MBGA_652P
SMB
SATA GPIO
Clocks
Power MGT
SYS GPIO
GPIO
7/10
+V3A
+V3S
+V5S
R999 10K_5%
R788 8.2K_5%
R787 8.2K_5%
ACCELERO_LED#
NPCI_RESET#
CLK_R3S_ICH14
14.31818MHZ
CLK_R3S_ICH48
48MHZ
R995 0_5%
R994 0_5%
R908 0_5% OPEN
SLP_S3#_3R
SLP_S4#_3R
SLP_S5#_3R
R838 0402_OPEN
PM_PWROK
PM_DPRSLPVR
CHENMKO_BAT54_3P_1017
LOW_BAT#_3
R741 0_5%
R743 0_5%
R991 8.2K_5%
PWR_SWIN2#_3
R990 0_5%
BUF_PLT_RST#
R784 100_5%
RSMRST#
R783 0402_OPEN
NIC_RESET
CB_IN#
WEBCAM_OFF#
LID_SW#_3
LED_LANLINK#_ICH
XMIT_OFF#
BT_OFF
R998 10K_5%
R996 10K_5%
R1000 8.2K_5%
R993 10K_5%
R992 10K_5%
R907 1K_5%
R843 10K_5%
CLK_PWRGD
Q1023
SSM3K7002FU
VR_PWRGD_CLKEN#
Q10
SLP_S3#_3R
LED_LANLINK#_ICH
R1054 10K_5%_OPEN
R789 8.2K_5%
R791 15K_5%
R790 8.2K_5%
R740 10K_5%_OPEN
R744 10K_5%_OPEN
R841 10K_5%
R742 10K_5%
9/29
ICH_3S_SMCLK
ICH_3S_SMDATA
avoid leakage in S3
INVENTEC
TITLE Galileo1.6
ICH7-3
SIZE A3
CODE CS
DOC. NUMBER 1310A2230401-0-MTR
REV AX2
SHEET 32 OF 52
CHANGE by Phil_Huang 29-Sep-2008
http://hobi-elektronika.net

PCIE AC coupling caps need to be
within 250 mil of the driver

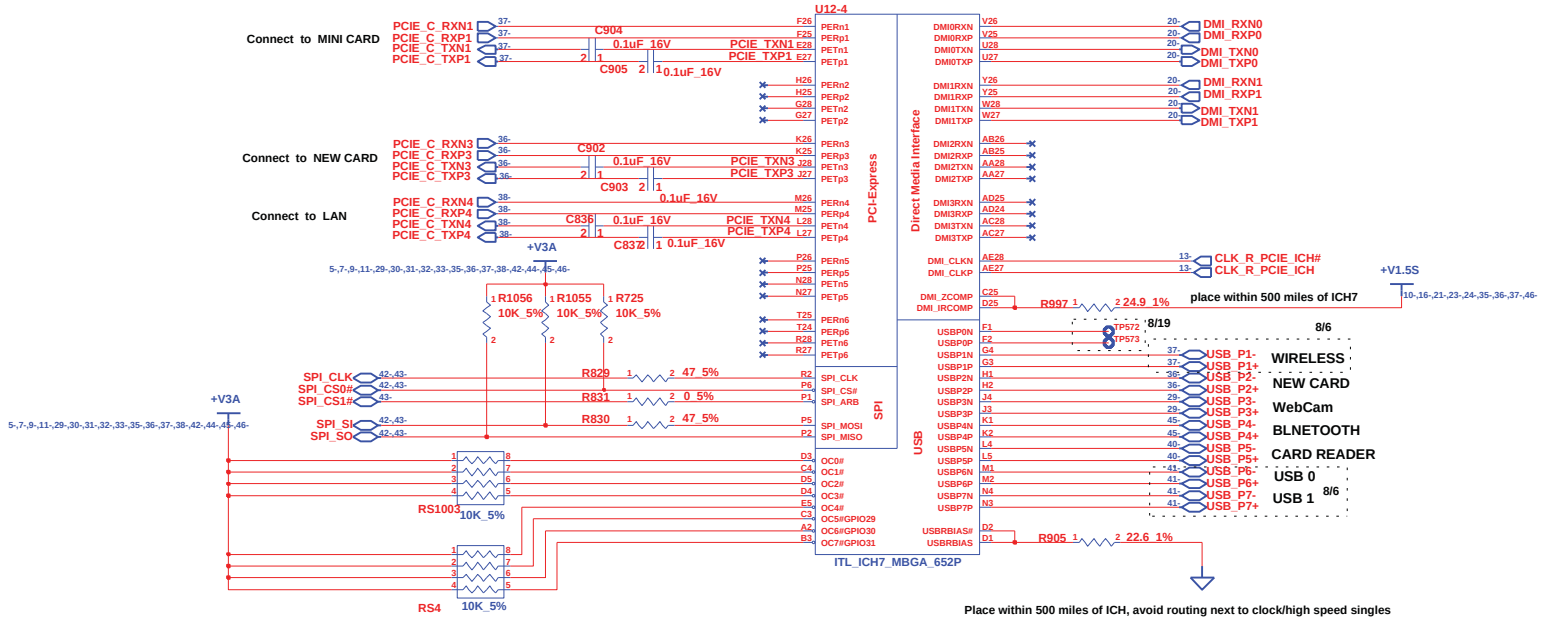

http://hobi-elektronika.net

CHANGE by	Phil_Huang	29-Sep-2008	

INVENTEC

TITLE *Galileo1.6*
ICH7-4

SIZE	CODE	DOC. NUMBER	REV
A3	CS	1310A2230401-0-MTR	AX2

SHEET 33 OF 52

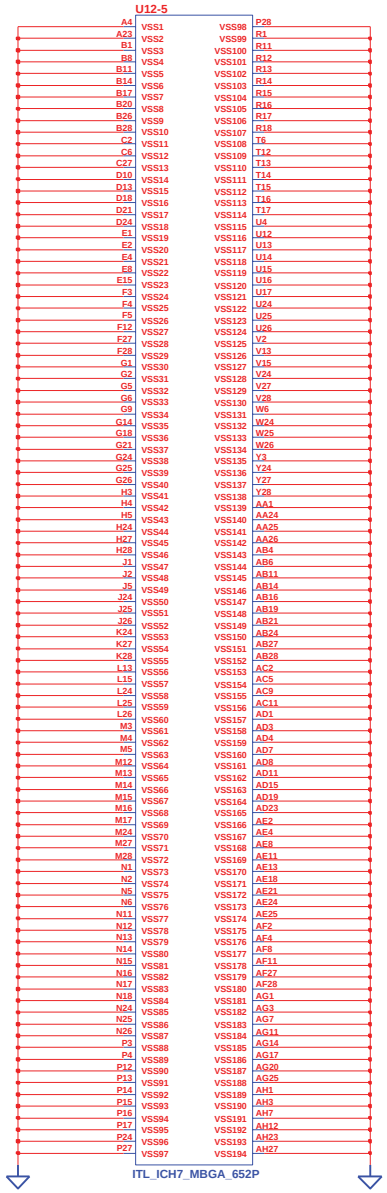

http://hobi-elektronika.net

CHANGE by	Phil_Huang	29-Sep-2008	

INVENTEC

TITLE: Galileo1.6
ICH7-5

SIZE	CODE	DOC. NUMBER	REV
A3	CS	1310A2230401-0-MT	RAX2

SHEET 34 OF 52

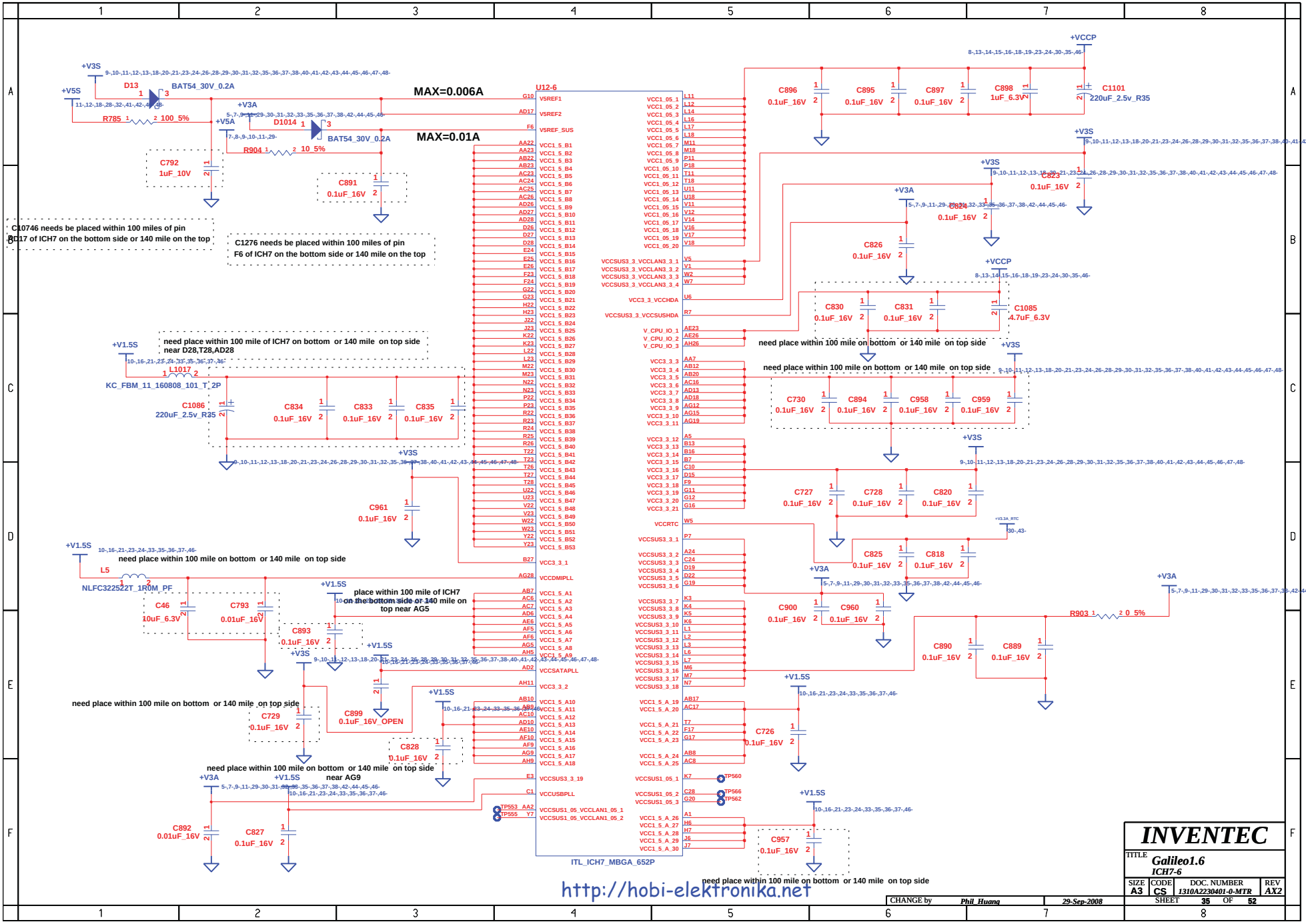

INVENTEC

TITLE: Galileo1.6 ICH7-6

SIZE	CODE	DOC. NUMBER	REV
A3	CS	1310A2230401-0-MTR	AX2

CHANGE by: Phil_Huang 29-Sep-2008

SHEET 35 OF 52

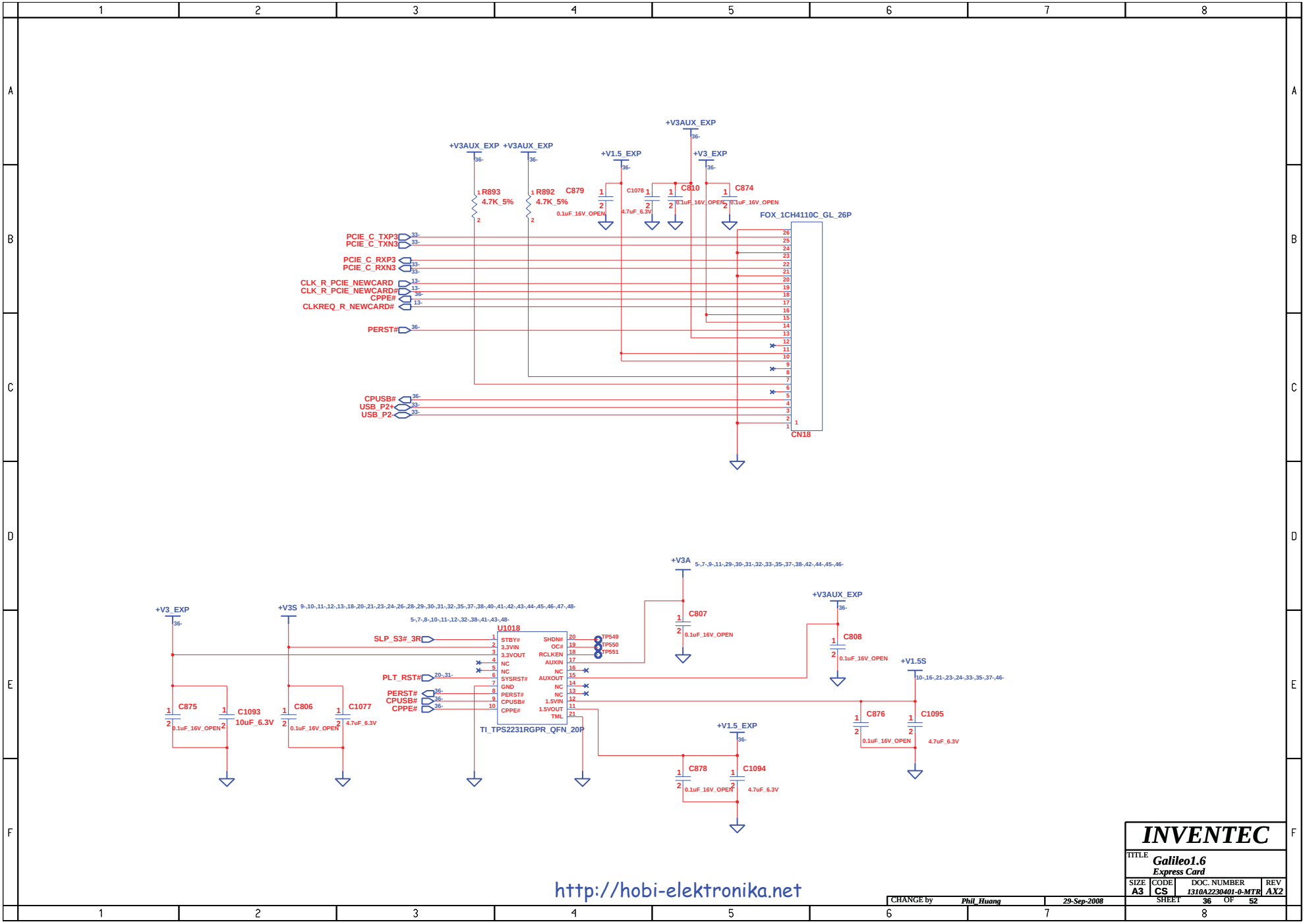

INVENTEC			
TITLE: Galileo1.6 Express Card			
SIZE: A3	CODE: CS	DOC. NUMBER: 1310A2230401-0-MTR	REV: AX2
CHANGE by: Phil_Huang	29-Sep-2008	SHEET 36 OF 52	

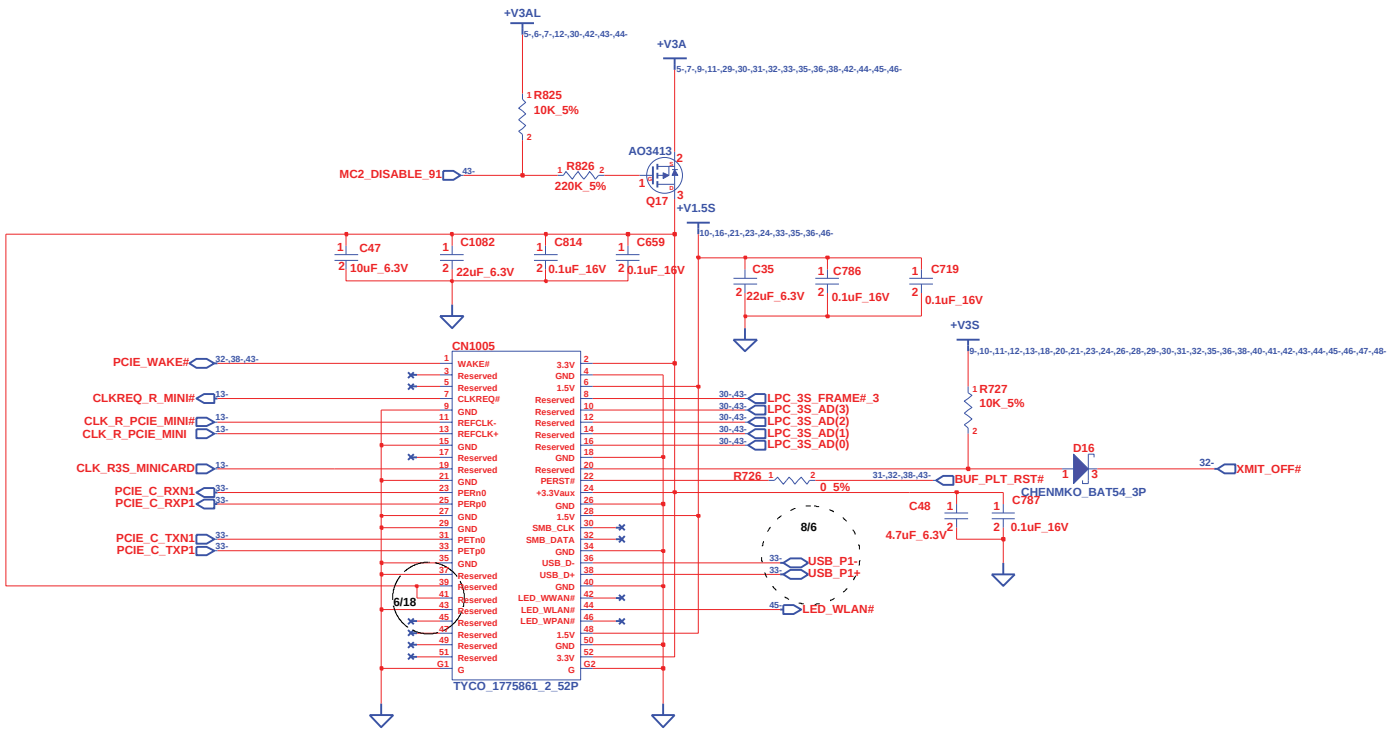

For Wireless

http://hobi-elektronika.net

CHANGE by	Phil_Huang	29-Sep-2008	

INVENTEC

TITLE *Galileo1.6 Mini CARD*

SIZE	CODE	DOC. NUMBER	REV
A3	CS	1310A2230401-0-MTR	AX2

SHEET 37 OF 52

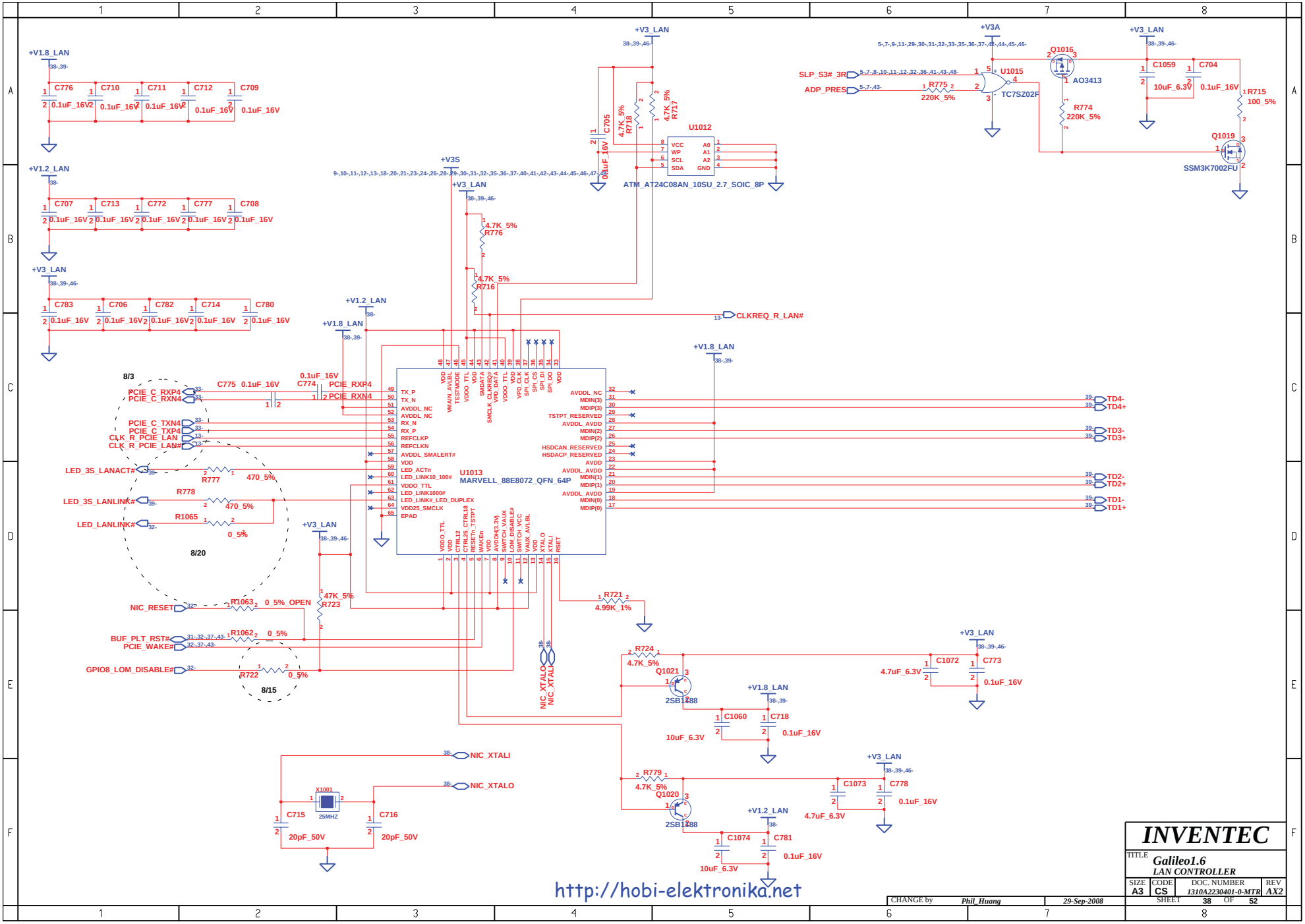
+V1.8_LAN
C776 0.1uF_16V
C710 0.1uF_16V
C711 0.1uF_16V
C712 0.1uF_16V
C709 0.1uF_16V
+V1.2_LAN
C707 0.1uF_16V
C713 0.1uF_16V
C772 0.1uF_16V
C777 0.1uF_16V
C708 0.1uF_16V
+V3_LAN
C783 0.1uF_16V
C706 0.1uF_16V
C782 0.1uF_16V
C714 0.1uF_16V
C780 0.1uF_16V
+V3_LAN
C705 0.1uF_16V
4.7K_5% R718
4.7K_5% R717
U1012
VCC
WP
SCL
SDA
A0
A1
A2
GND
ATM_AT24C08AN_10SU_2.7_SOIC_8P
+V3A
SLP_S3#_3R
ADP_PRES
R775 220K_5%
U1015 TC7SZ02F
Q1016 AO3413
R774 220K_5%
C1059 10uF_6.3V
C704 0.1uF_16V
R715 100_5%
Q1019 SSM3K7002FU
+V3S
+V3_LAN
4.7K_5% R776
4.7K_5% R716
CLKREQ_R_LAN#
+V1.2_LAN
+V1.8_LAN
8/3
PCIE_C_RXP4
PCIE_C_RXN4
C775 0.1uF_16V
C774 0.1uF_16V
PCIE_RXP4
PCIE_RXN4
PCIE_C_TXN4
PCIE_C_TXP4
CLK_R_PCIE_LAN
CLK_R_PCIE_LAN#
LED_3S_LANACT#
R777 470_5%
R778 470_5%
LED_3S_LANLINK#
R1065 0_5%
LED_LANLINK#
8/20
U1013
MARVELL_88E8072_QFN_64P
TX_P
TX_N
AVDDL_NC
RX_N
RX_P
REFCLKP
REFCLKN
AVDDL_SMALERT#
VDD
LED_ACTn
LED_LINK10_100#
VDDO_TTL
LED_LINK1000#
LED_LINK# LED_DUPLEX
VDD25_SMCLK
EPAD
TD4-
TD4+
TD3-
TD3+
TD2-
TD2+
TD1-
TD1+
+V3_LAN
47K_5% R723
NIC_RESET
R1063 0_5%_OPEN
BUF_PLT_RST#
PCIE_WAKE#
R1062 0_5%
GPIO8_LOM_DISABLE#
R722 0_5%
8/15
R721 4.99K_1%
NIC_XTALO
NIC_XTALI
R724 4.7K_5%
Q1021 2SB1188
C1060 10uF_6.3V
C718 0.1uF_16V
+V1.8_LAN
C1072 4.7uF_6.3V
C773 0.1uF_16V
+V3_LAN
R779 4.7K_5%
Q1020 2SB1188
C1073 4.7uF_6.3V
C778 0.1uF_16V
+V3_LAN
+V1.2_LAN
C1074 10uF_6.3V
C781 0.1uF_16V
NIC_XTALI
NIC_XTALO
X1001 25MHZ
C715 20pF_50V
C716 20pF_50V
http://hobi-elektronika.net
INVENTEC
TITLE
Galileo1.6
LAN CONTROLLER
SIZE A3
CODE CS
DOC. NUMBER 1310A2230401-0-MTR
REV AX2
SHEET 38 OF 52
CHANGE by Phil_Huang
29-Sep-2008

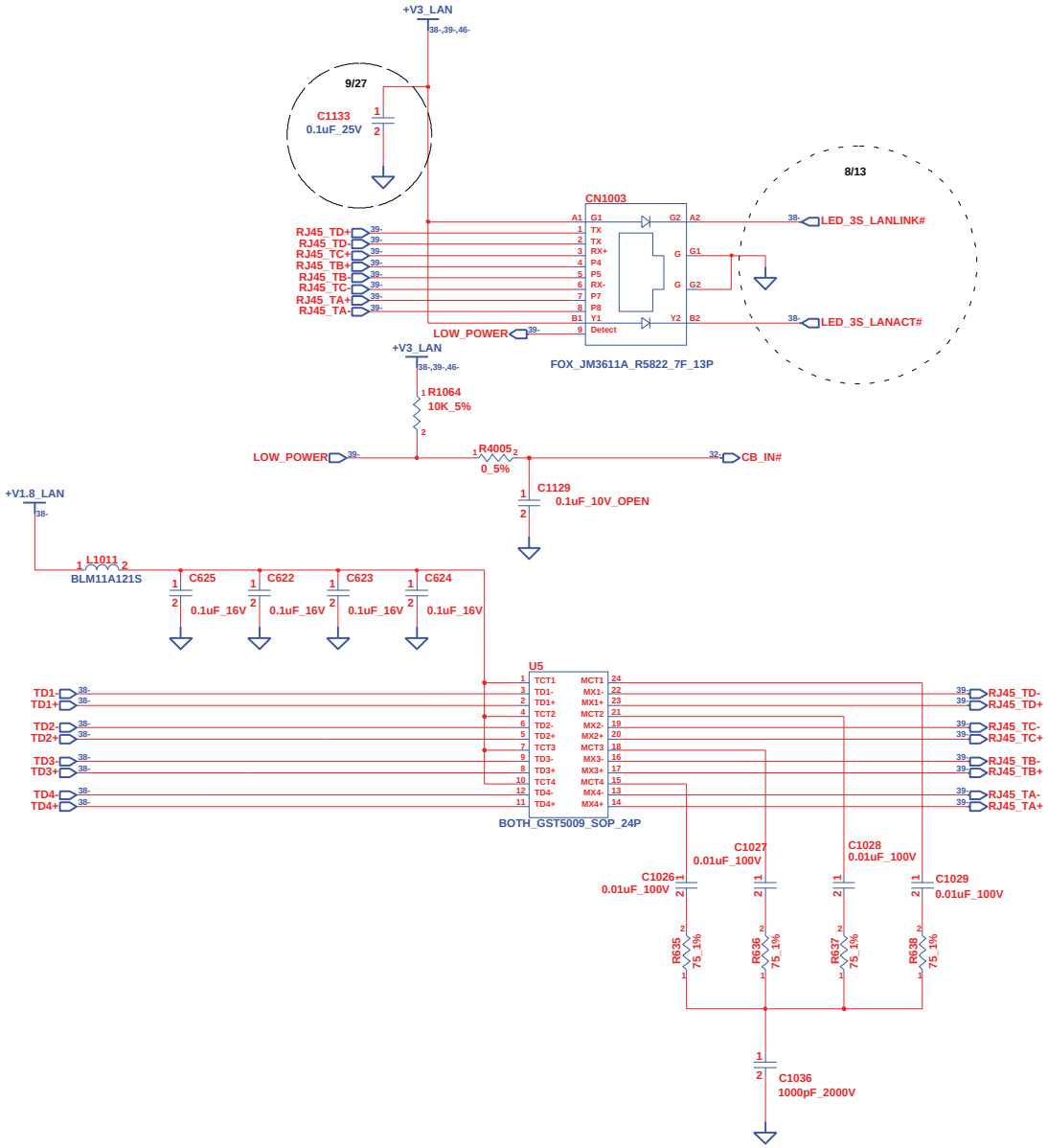

http://hobi-elektronika.net

CHANGE by	Phil_Huang	29-Sep-2008	

INVENTEC

TITLE: *Galileo1.6*
LAN RJ45

SIZE	CODE	DOC. NUMBER	REV
A3	CS	1310A2230401-0-MTR	AX2

SHEET 39 OF 52

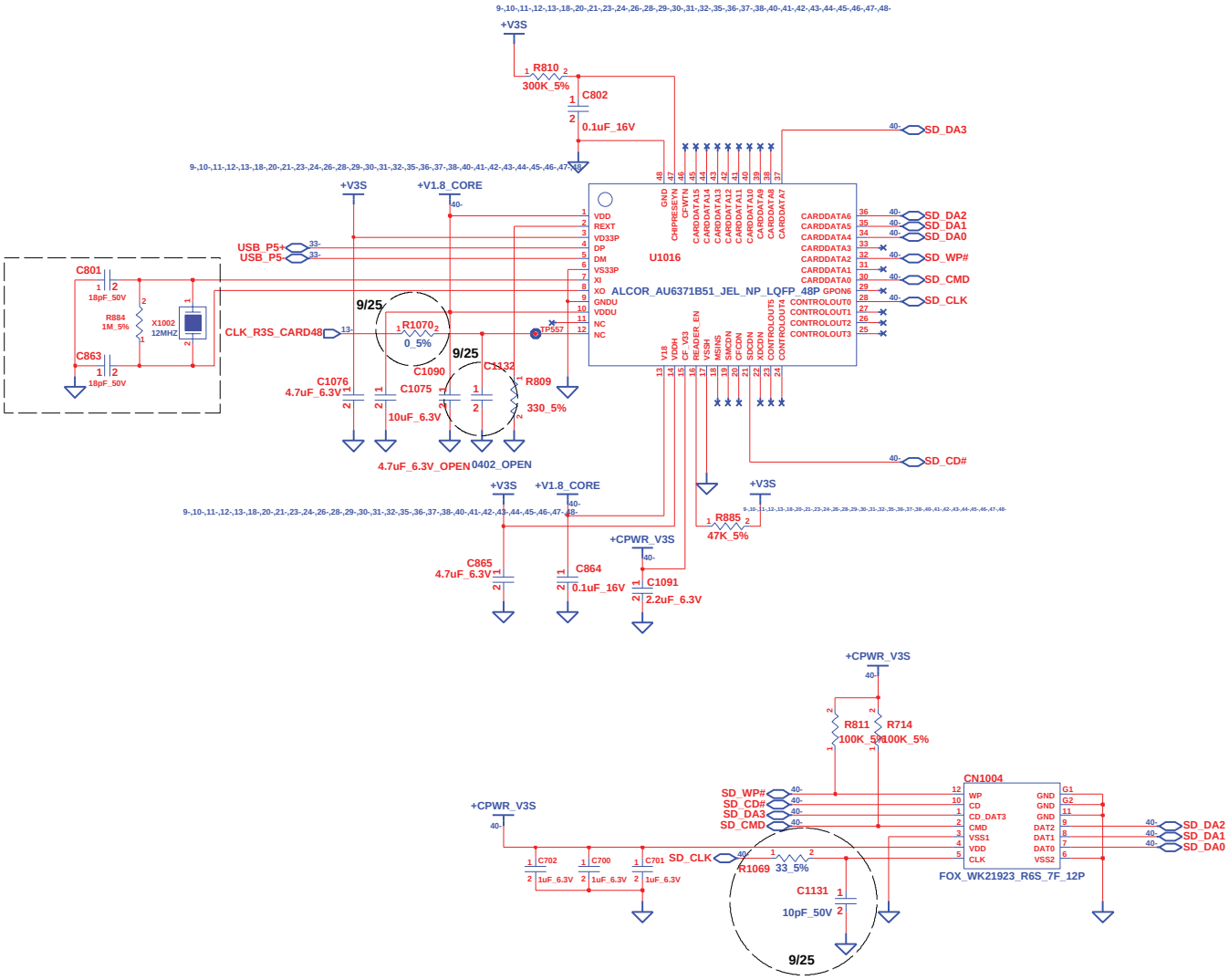

http://hobi-elektronika.net

CHANGE by	Phil_Huang	29-Sep-2008	

INVENTEC

TITLE: *Galileo1.6*
CARD READER

SIZE	CODE	DOC. NUMBER	REV
A3	CS	1310A2230401-0-MTR	AX2

SHEET 40 OF 52

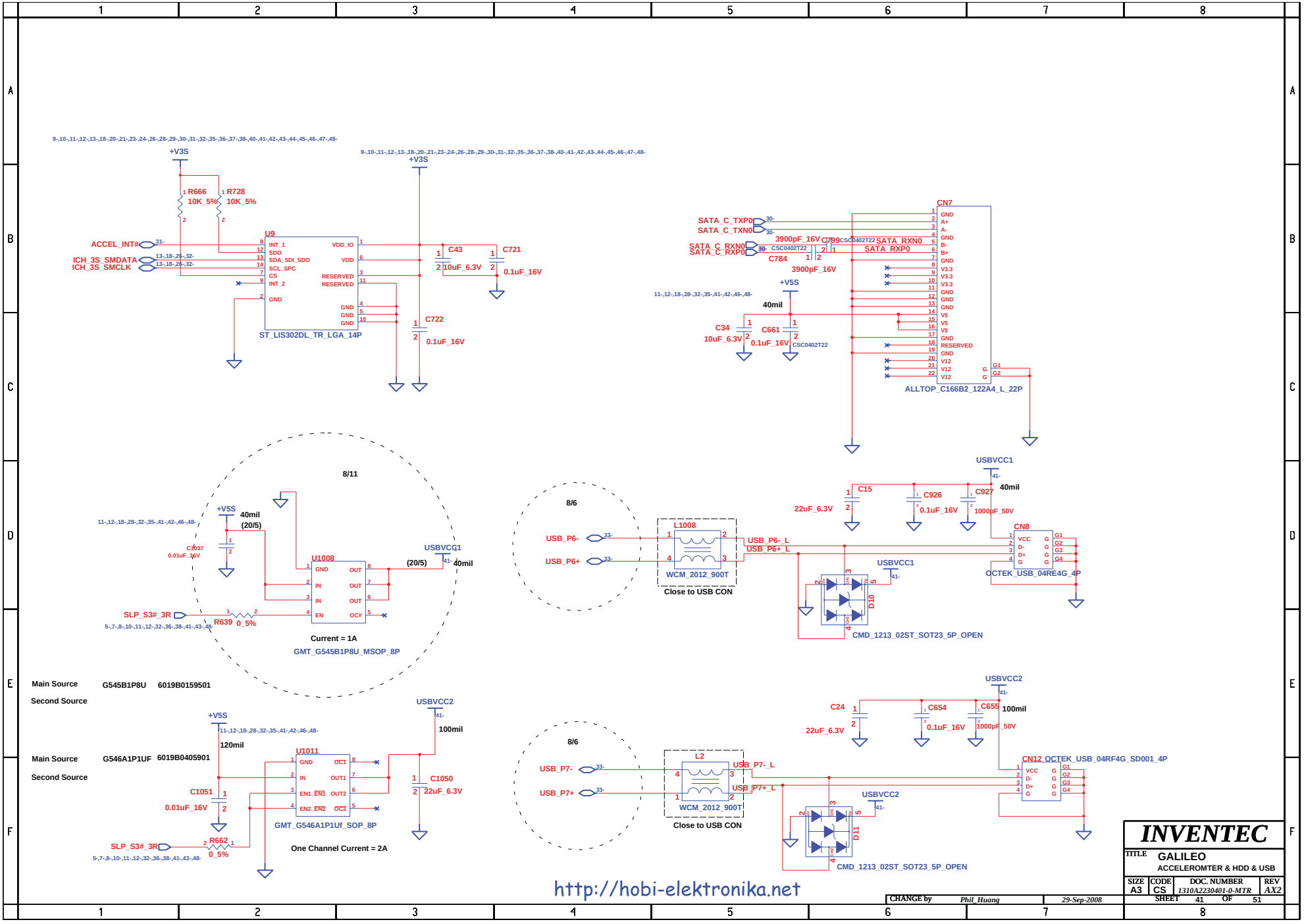
+V3S
R666 10K_5%
R728 10K_5%
ACCEL_INT#
ICH_3S_SMDATA
ICH_3S_SMCLK
U9
INT_1
SDO
SDA_SDI_SDO
SCL_SPC
CS
INT_2
GND
VDD_IO
VDD
RESERVED
ST_LIS302DL_TR_LGA_14P
C43 10uF_6.3V
C721 0.1uF_16V
C722 0.1uF_16V
SATA_C_TXP0
SATA_C_TXN0
SATA_C_RXN0
SATA_C_RXP0
3900pF_16V
C784 3900pF_16V
SATA_RXN0
SATA_RXP0
CN7
ALLTOP_C166B2_122A4_L_22P
+V5S
40mil
C34 10uF_6.3V
C661 0.1uF_16V
8/11
C1037 0.01uF_16V
U1008
GMT_G545B1P8U_MSOP_8P
USBVCC1
(20/5)
SLP_S3#_3R
R639 0_5%
Current = 1A
8/6
USB_P6-
USB_P6+
L1008
WCM_2012_900T
Close to USB CON
USB_P6-_L
USB_P6+_L
C15 22uF_6.3V
C926 0.1uF_16V
C927 1000pF_50V
CN8
OCTEK_USB_04RE4G_4P
D10
CMD_1213_02ST_SOT23_5P_OPEN
Main Source G545B1P8U 6019B0159501
Second Source
USBVCC2
100mil
120mil
C1051 0.01uF_16V
U1011
GMT_G546A1P1Uf_SOP_8P
C1050 22uF_6.3V
R662 0_5%
One Channel Current = 2A
Main Source G546A1P1UF 6019B0405901
Second Source
USB_P7-
USB_P7+
L2
USB_P7-_L
USB_P7+_L
C24 22uF_6.3V
C654 0.1uF_16V
C655 1000pF_50V
CN12 OCTEK_USB_04RF4G_SD001_4P
D11
CMD_1213_02ST_SOT23_5P_OPEN
http://hobi-elektronika.net
INVENTEC
TITLE GALILEO
ACCELEROMTER & HDD & USB
SIZE A3
CODE CS
DOC. NUMBER 1310A2230401-0-MTR
REV AX2
CHANGE by Phil_Huang
29-Sep-2008
SHEET 41 OF 51

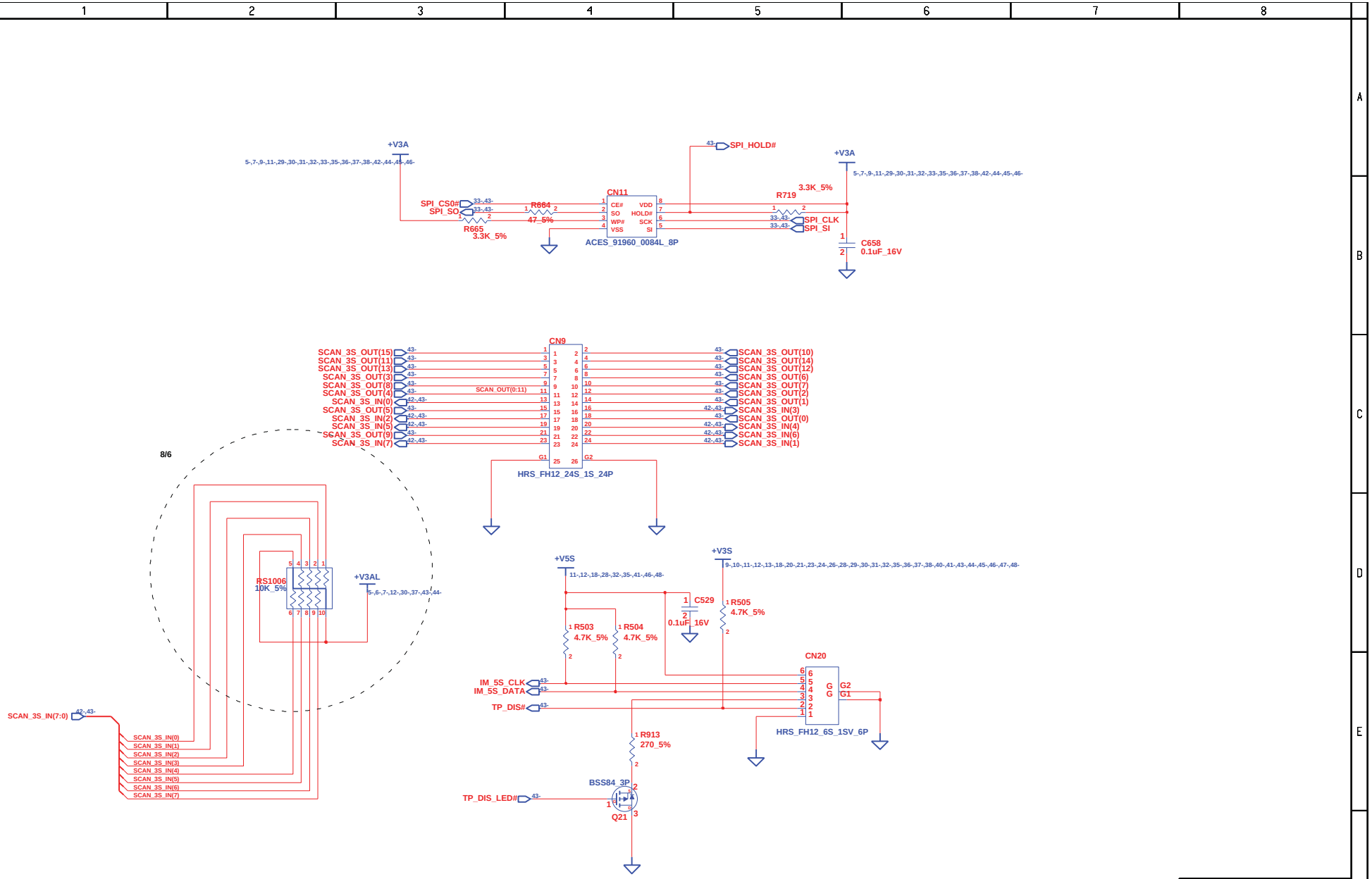

http://hobi-elektronika.net

CHANGE by	Phil_Huang	29-Sep-2008	

INVENTEC

TITLE **Galileo1.6**

SPI & KEYBOARD CONN & TOUCH PAD CONN

SIZE	CODE	DOC. NUMBER	REV
A3	CS	1310A2230401-0-MTR	AX2

SHEET 42 OF 52

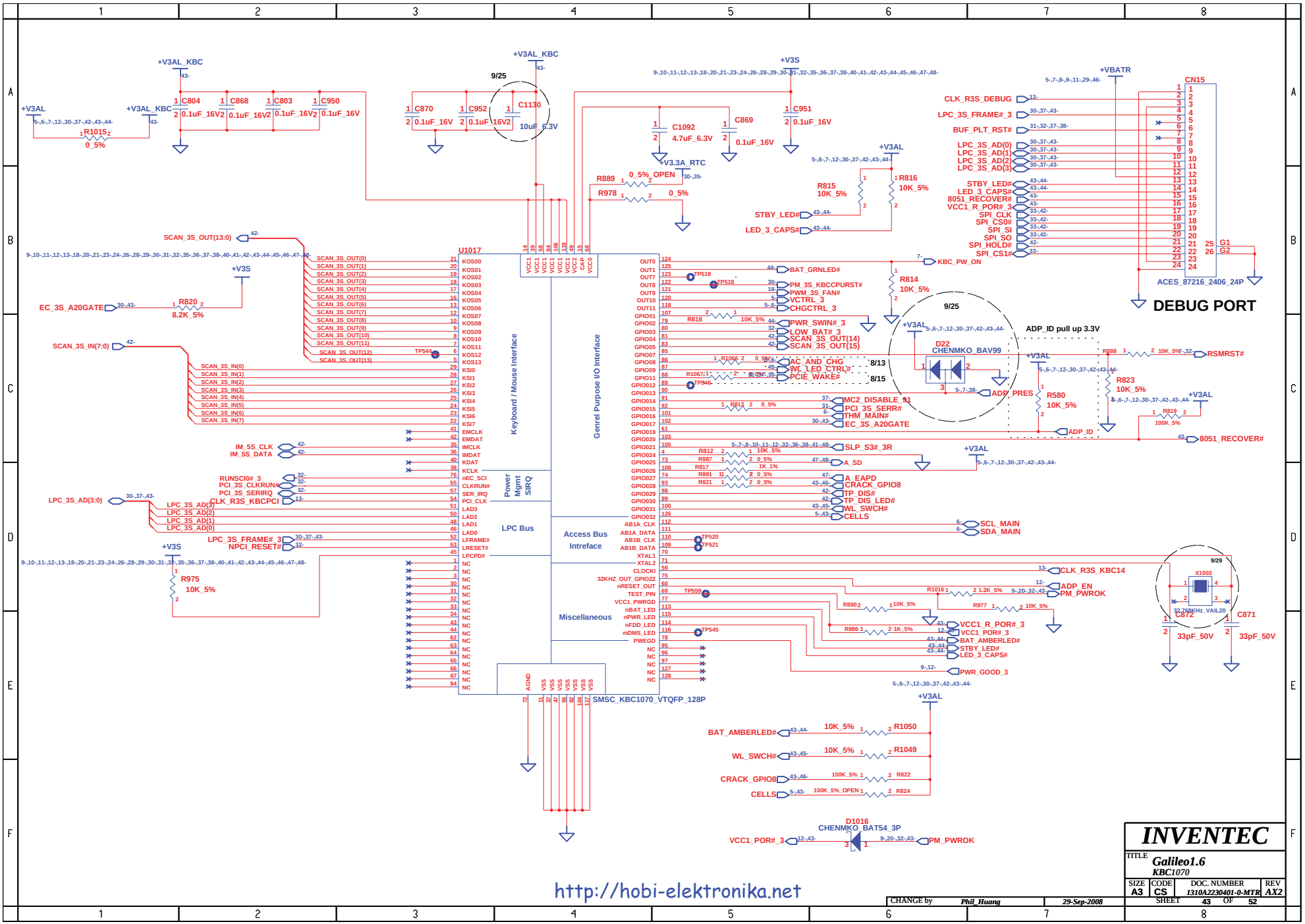

INVENTEC			
TITLE: Galileo1.6 KBC1070			
SIZE: A3	CODE: CS	DOC. NUMBER: 1310A2230401-0-MTR	REV: AX2
CHANGE by: Phil_Huang	29-Sep-2008	SHEET 43 OF 52	

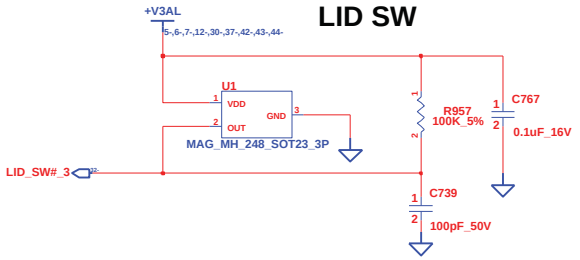

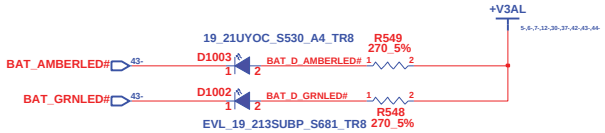

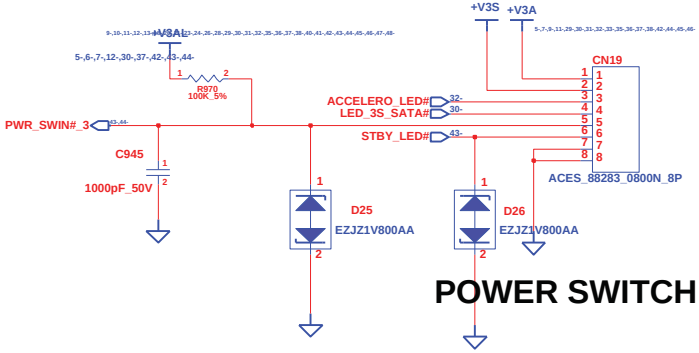

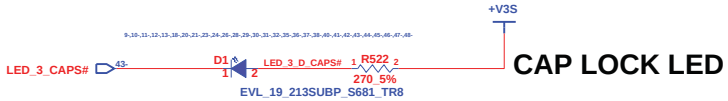

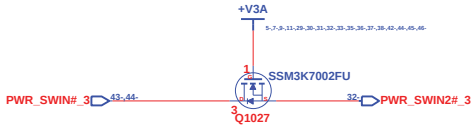

http://hobi-elektronika.net

CHANGE by	Phil_Huang	29-Sep-2008	

INVENTEC

TITLE *Galileo1.6*
LID & LED

SIZE	CODE	DOC. NUMBER	REV
A3	CS	1310A2230401-0-MTR	AX2

SHEET 44 OF 52

BLUETOOTH

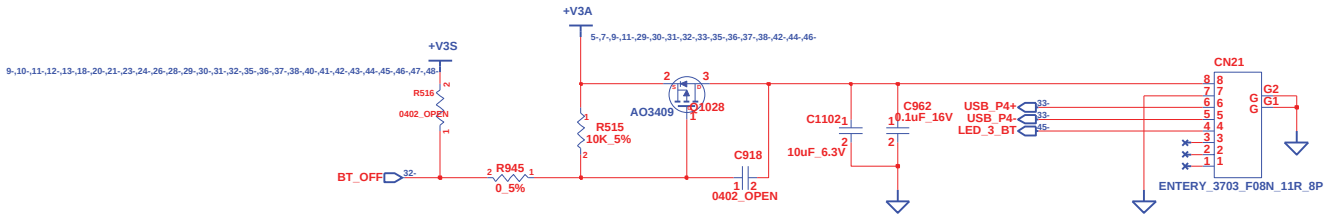

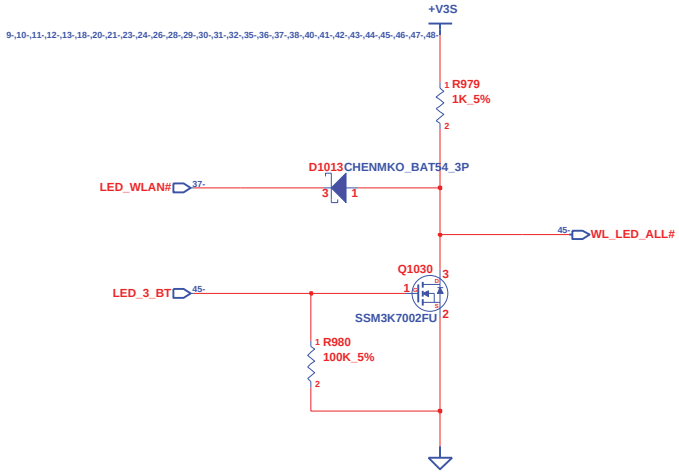

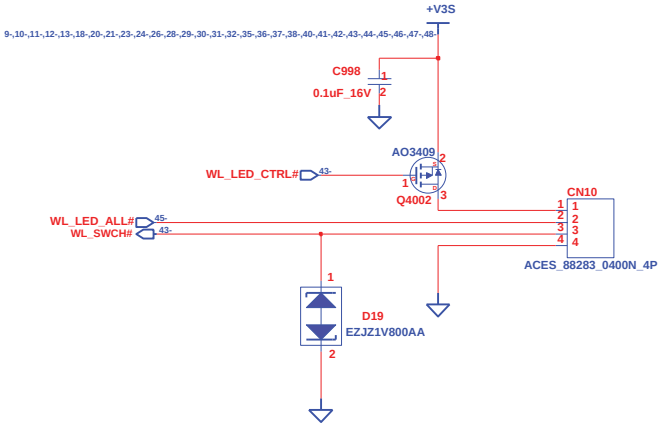

WIRELESS SWITCH LED CONN

http://hobi-elektronika.net

CHANGE by	Phil_Huang	29-Sep-2008	

INVENTEC

TITLE: Galileo1.6
BLUETOOTH & WIRELESS DB CONN

SIZE	CODE	DOC. NUMBER	REV
A3	CS	1310A2230401-0-MTR	AX2

SHEET 45 OF 52

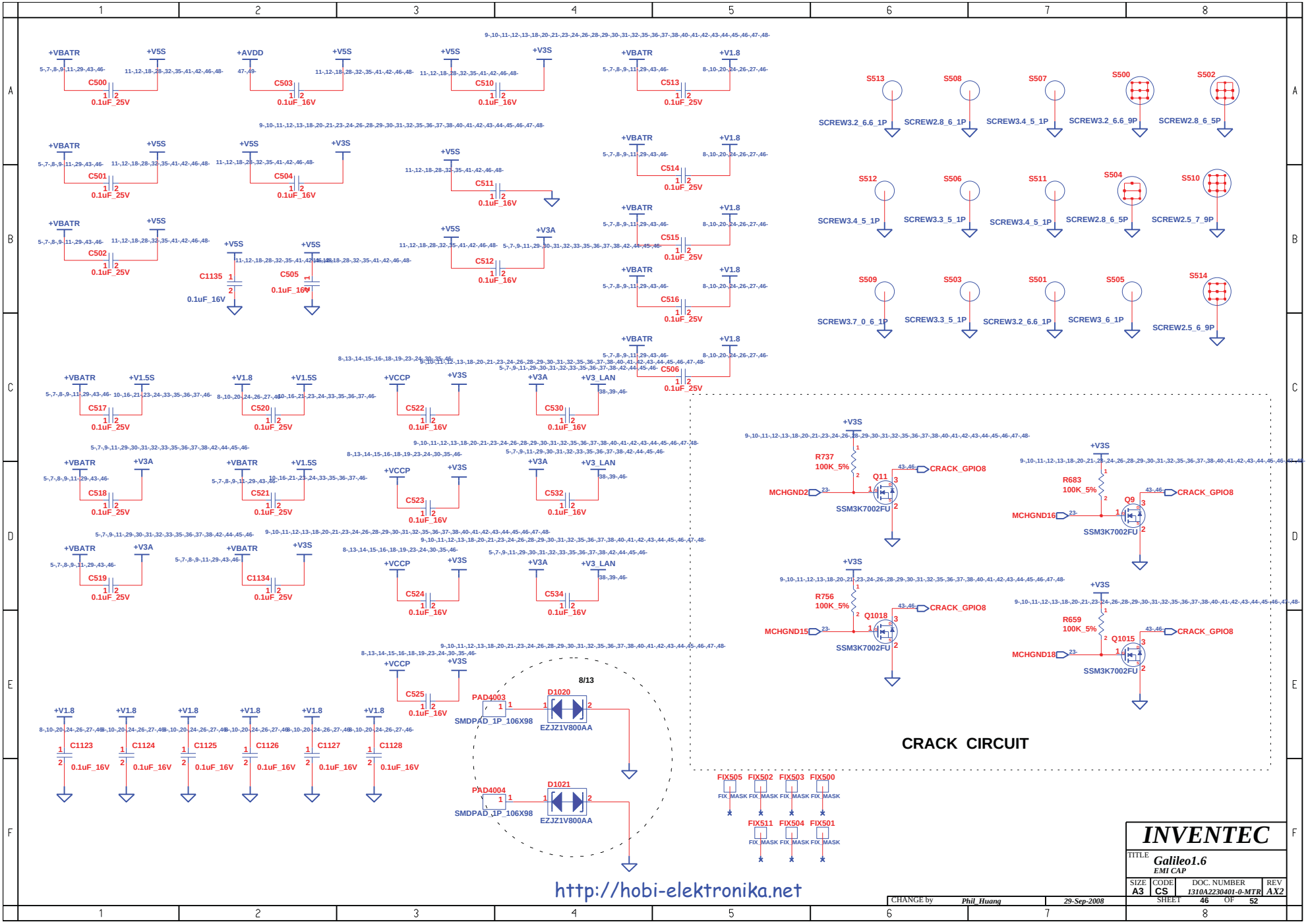
C500 0.1uF_25V
C501 0.1uF_25V
C502 0.1uF_25V
C503 0.1uF_16V
C504 0.1uF_16V
C505 0.1uF_16V
C506 0.1uF_25V
C510 0.1uF_16V
C511 0.1uF_16V
C512 0.1uF_16V
C513 0.1uF_25V
C514 0.1uF_25V
C515 0.1uF_25V
C516 0.1uF_25V
C517 0.1uF_25V
C518 0.1uF_25V
C519 0.1uF_25V
C520 0.1uF_25V
C521 0.1uF_25V
C522 0.1uF_16V
C523 0.1uF_16V
C524 0.1uF_16V
C525 0.1uF_16V
C530 0.1uF_16V
C532 0.1uF_16V
C534 0.1uF_16V
C1123 0.1uF_16V
C1124 0.1uF_16V
C1125 0.1uF_16V
C1126 0.1uF_16V
C1127 0.1uF_16V
C1128 0.1uF_16V
C1134 0.1uF_25V
C1135 0.1uF_16V
+VBATR
+V5S
+AVDD
+V3S
+V1.8
+V1.5S
+VCCP
+V3A
+V3_LAN
S513 SCREW3.2_6.6_1P
S508 SCREW2.8_6_1P
S507 SCREW3.4_5_1P
S500 SCREW3.2_6.6_9P
S502 SCREW2.8_6_5P
S512 SCREW3.4_5_1P
S506 SCREW3.3_5_1P
S511 SCREW3.4_5_1P
S504 SCREW2.8_6_5P
S510 SCREW2.5_7_9P
S509 SCREW3.7_0_6_1P
S503 SCREW3.3_5_1P
S501 SCREW3.2_6.6_1P
S505 SCREW3_6_1P
S514 SCREW2.5_6_9P
R737 100K_5%
R683 100K_5%
R756 100K_5%
R659 100K_5%
Q11 SSM3K7002FU
Q9 SSM3K7002FU
Q1018 SSM3K7002FU
Q1015 SSM3K7002FU
MCHGND2
MCHGND16
MCHGND15
MCHGND18
CRACK_GPIO8
CRACK CIRCUIT
PAD4003 SMDPAD_1P_106X98
PAD4004 SMDPAD_1P_106X98
D1020 EZJZ1V800AA
D1021 EZJZ1V800AA
8/13
FIX505 FIX502 FIX503 FIX500
FIX511 FIX504 FIX501
FIX_MASK
http://hobi-elektronika.net
INVENTEC
TITLE Galileo1.6
EMI CAP
SIZE A3
CODE CS
DOC. NUMBER 1310A2230401-0-MTR
REV AX2
SHEET 46 OF 52
CHANGE by Phil_Huang
29-Sep-2008

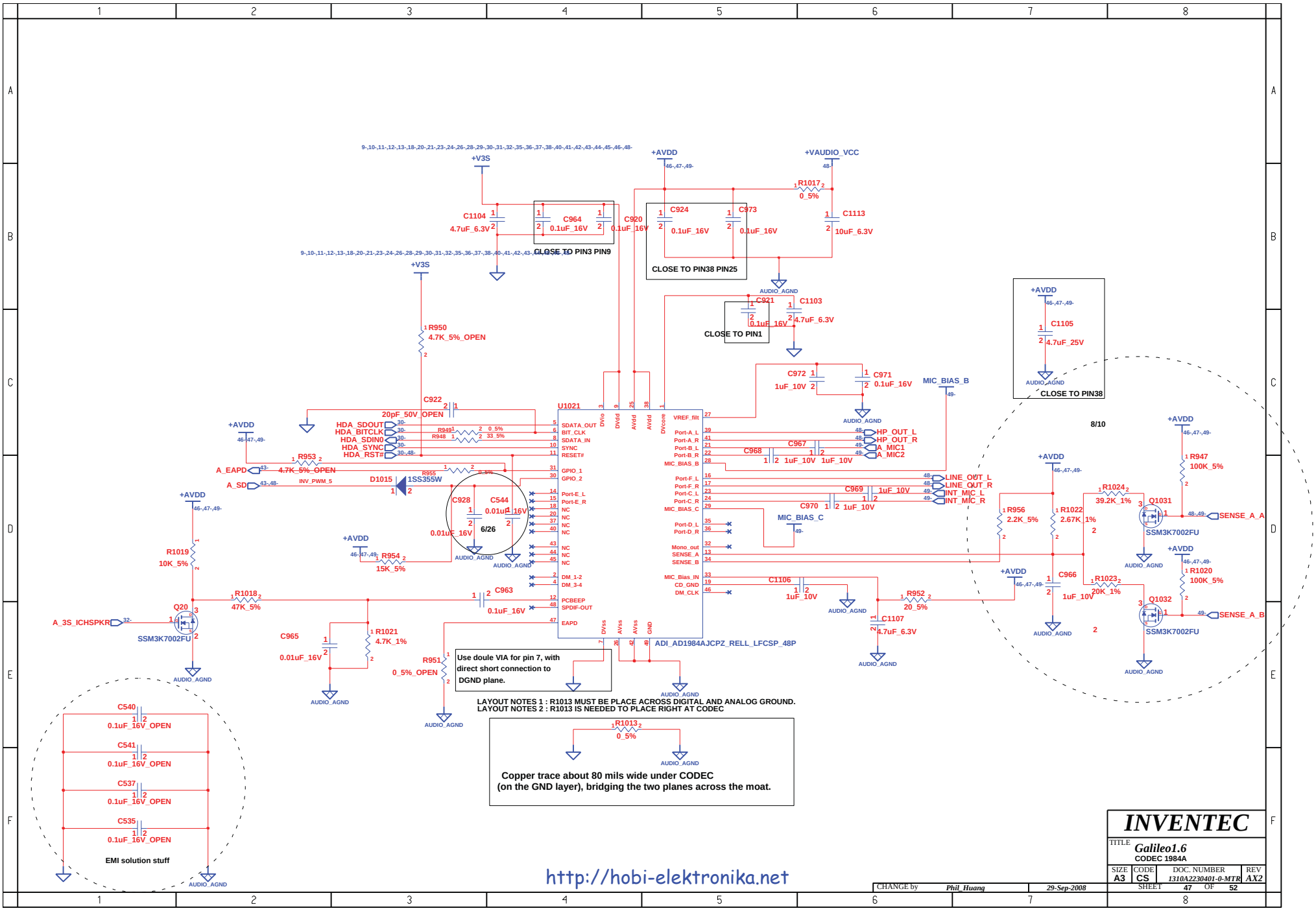
+V3S
+AVDD
+VAUDIO_VCC
C1104 4.7uF_6.3V
C964 0.1uF_16V
C920 0.1uF_16V
CLOSE TO PIN3 PIN9
C924 0.1uF_16V
C973 0.1uF_16V
CLOSE TO PIN38 PIN25
R1017 0_5%
C1113 10uF_6.3V
AUDIO_AGND
C921 0.1uF_16V
C1103 4.7uF_6.3V
CLOSE TO PIN1
R950 4.7K_5%_OPEN
C1105 4.7uF_25V
CLOSE TO PIN38
C972 1uF_10V
C971 0.1uF_16V
MIC_BIAS_B
C922 20pF_50V_OPEN
U1021
HDA_SDOUT
HDA_BITCLK
HDA_SDIN0
HDA_SYNC
HDA_RST#
R949 0_5%
R948 33_5%
SDATA_OUT
BIT_CLK
SDATA_IN
SYNC
RESET#
GPIO_1
GPIO_2
Port-E_L
Port-E_R
DM_1-2
DM_3-4
PCBEEP
SPDIF-OUT
EAPD
VREF_filt
Port-A_L
Port-A_R
Port-B_L
Port-B_R
MIC_BIAS_B
Port-F_L
Port-F_R
Port-C_L
Port-C_R
MIC_BIAS_C
Port-D_L
Port-D_R
Mono_out
SENSE_A
SENSE_B
MIC_Bias_IN
CD_GND
DM_CLK
HP_OUT_L
HP_OUT_R
A_MIC1
A_MIC2
LINE_OUT_L
LINE_OUT_R
INT_MIC_L
INT_MIC_R
C968 1uF_10V
C967 1uF_10V
C969 1uF_10V
C970 1uF_10V
MIC_BIAS_C
C1106 1uF_10V
R952 20_5%
C1107 4.7uF_6.3V
ADI_AD1984AJCPZ_RELL_LFCSP_48P
A_EAPD
A_SD
R953 4.7K_5%_OPEN
INV_PWM_5
D1015 1SS355W
R955 0_5%
C928 0.01uF_16V
C544 0.01uF_16V
6/26
R954 15K_5%
R1019 10K_5%
R1018 47K_5%
C963 0.1uF_16V
Q20 SSM3K7002FU
A_3S_ICHSPKR
C965 0.01uF_16V
R1021 4.7K_1%
R951 0_5%_OPEN
Use doule VIA for pin 7, with direct short connection to DGND plane.
LAYOUT NOTES 1 : R1013 MUST BE PLACE ACROSS DIGITAL AND ANALOG GROUND.
LAYOUT NOTES 2 : R1013 IS NEEDED TO PLACE RIGHT AT CODEC
R1013 0_5%
Copper trace about 80 mils wide under CODEC
(on the GND layer), bridging the two planes across the moat.
8/10
R956 2.2K_5%
R1022 2.67K_1%
R1024 39.2K_1%
R1023 20K_1%
C966 1uF_10V
R947 100K_5%
R1020 100K_5%
Q1031 SSM3K7002FU
Q1032 SSM3K7002FU
SENSE_A_A
SENSE_A_B
C540 0.1uF_16V_OPEN
C541 0.1uF_16V_OPEN
C537 0.1uF_16V_OPEN
C535 0.1uF_16V_OPEN
EMI solution stuff
http://hobi-elektronika.net
INVENTEC
TITLE Galileo1.6
CODEC 1984A
SIZE A3
CODE CS
DOC. NUMBER 1310A2230401-0-MTR
REV AX2
CHANGE by Phil_Huang
29-Sep-2008
SHEET 47 OF 52

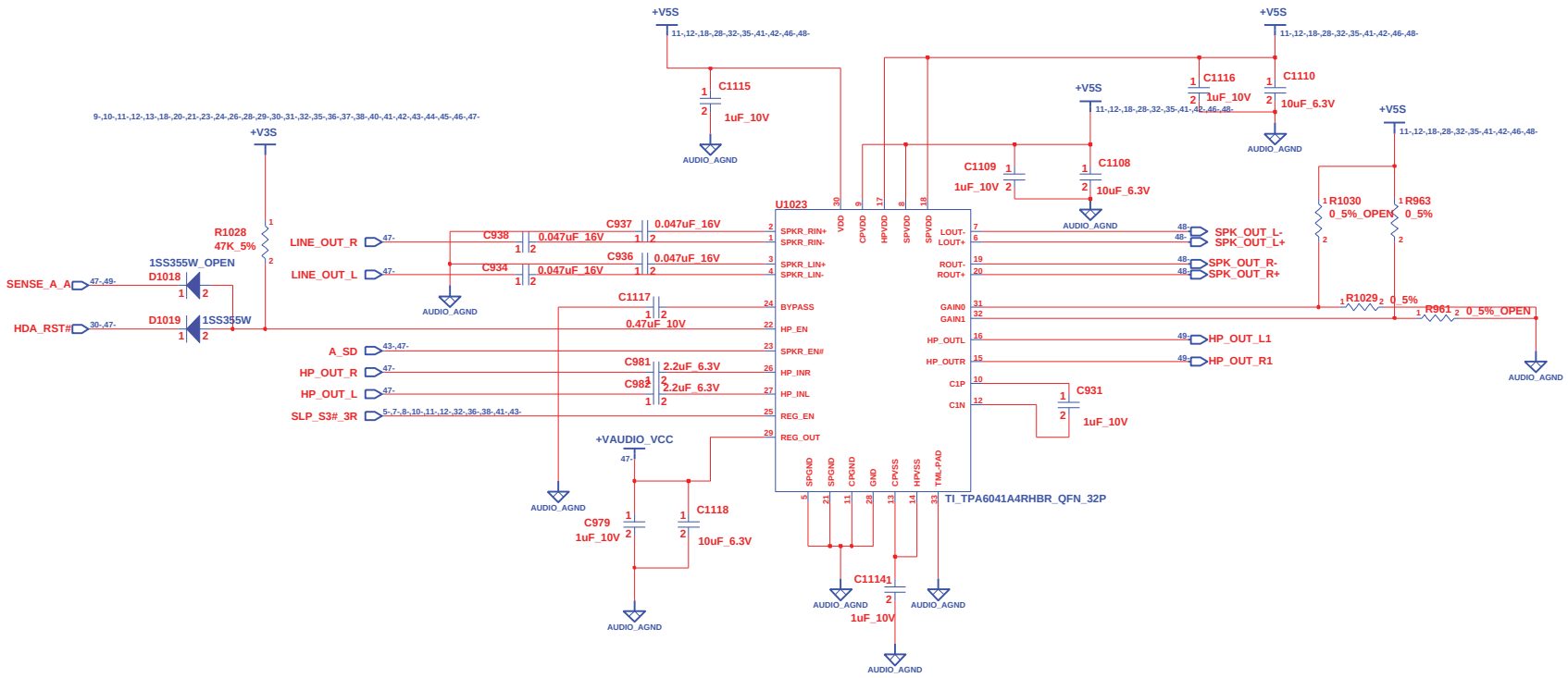

Speaker Conn

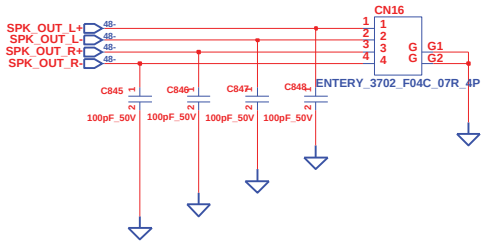

Mic Conn

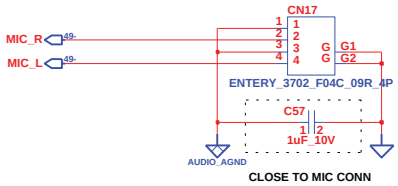

http://hobi-elektronika.net

INVENTEC			
TITLE: Galileo1.6 SPEAKER & INT MIC			
SIZE A3	CODE CS	DOC. NUMBER 1310A2230401-0-MTR	REV AX2
CHANGE by Phil_Huang	29-Sep-2008	SHEET 48 OF 52	

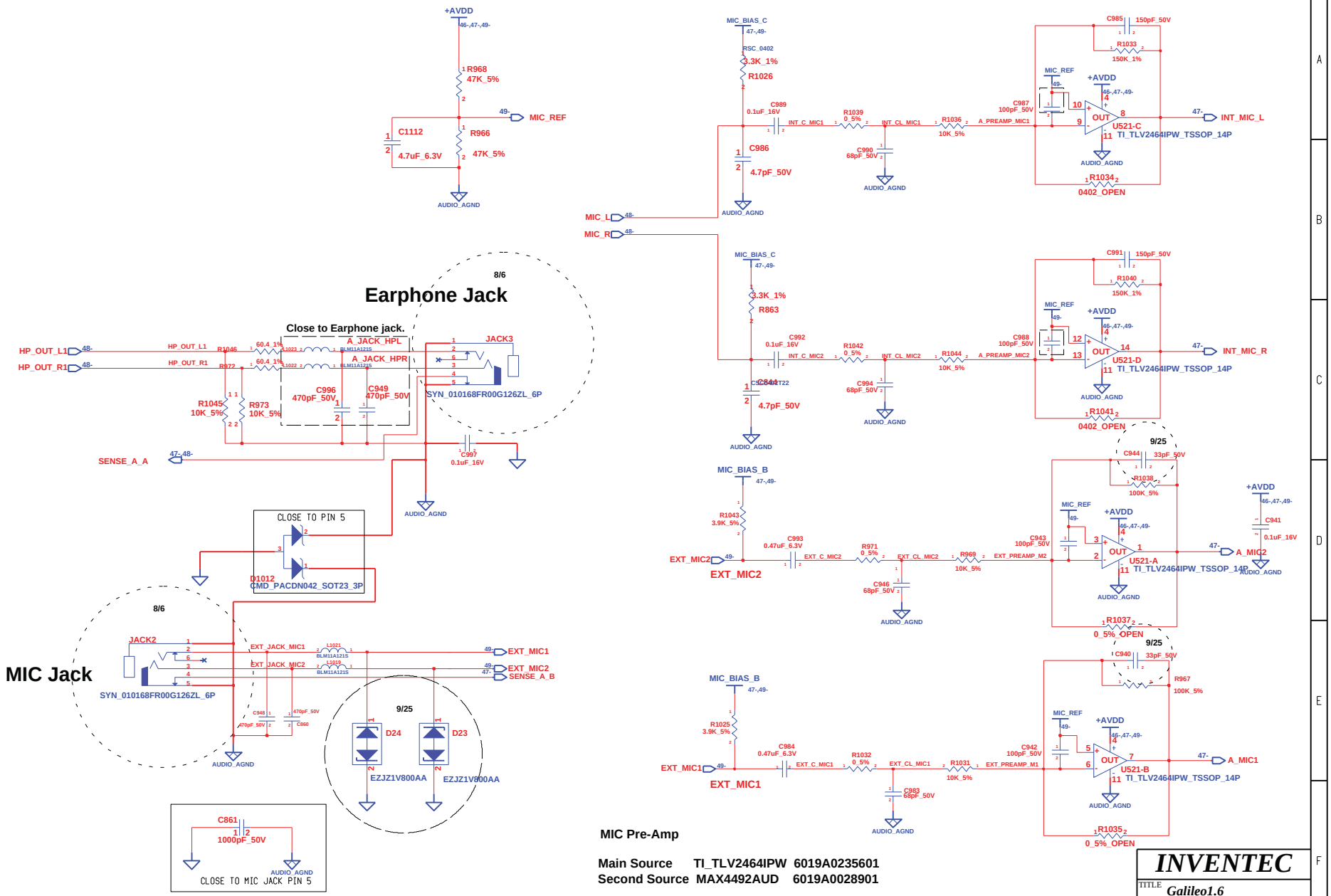

http://hobi-elektronika.net

CHANGE by	Phil_Huang	29-Sep-2008	

INVENTEC

TITLE: *Galileo1.6*
HEADPHONE & EXT MIC

SIZE	CODE	DOC. NUMBER	REV
A3	CS	1310A2230401-0-MTR	AX2

SHEET 49 OF 52

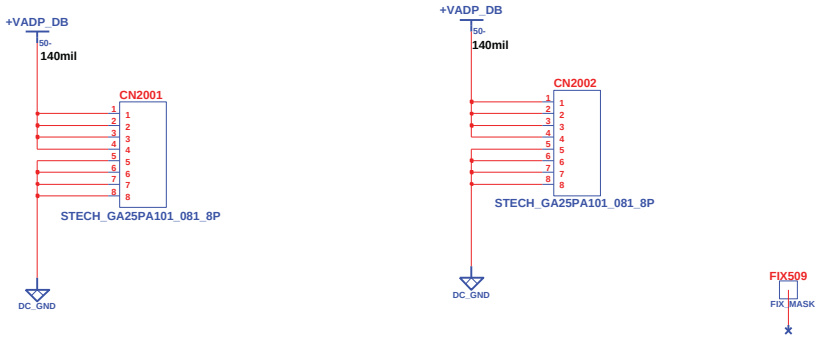

POWER DB

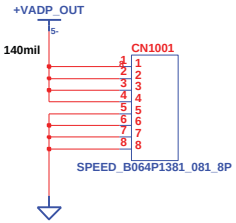

CLOSE TO DC JACK

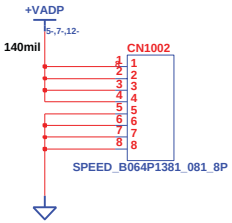

CLOSE TO SYSTEM POWER

http://hobi-elektronika.net

INVENTEC			
TITLE Galileo1.6			
SIZE A3	CODE CS	DOC. NUMBER 1310A2230401-0-MTR	REV AX2
CHANGE by Phil_Huang	29-Sep-2008	SHEET 50 OF 52	

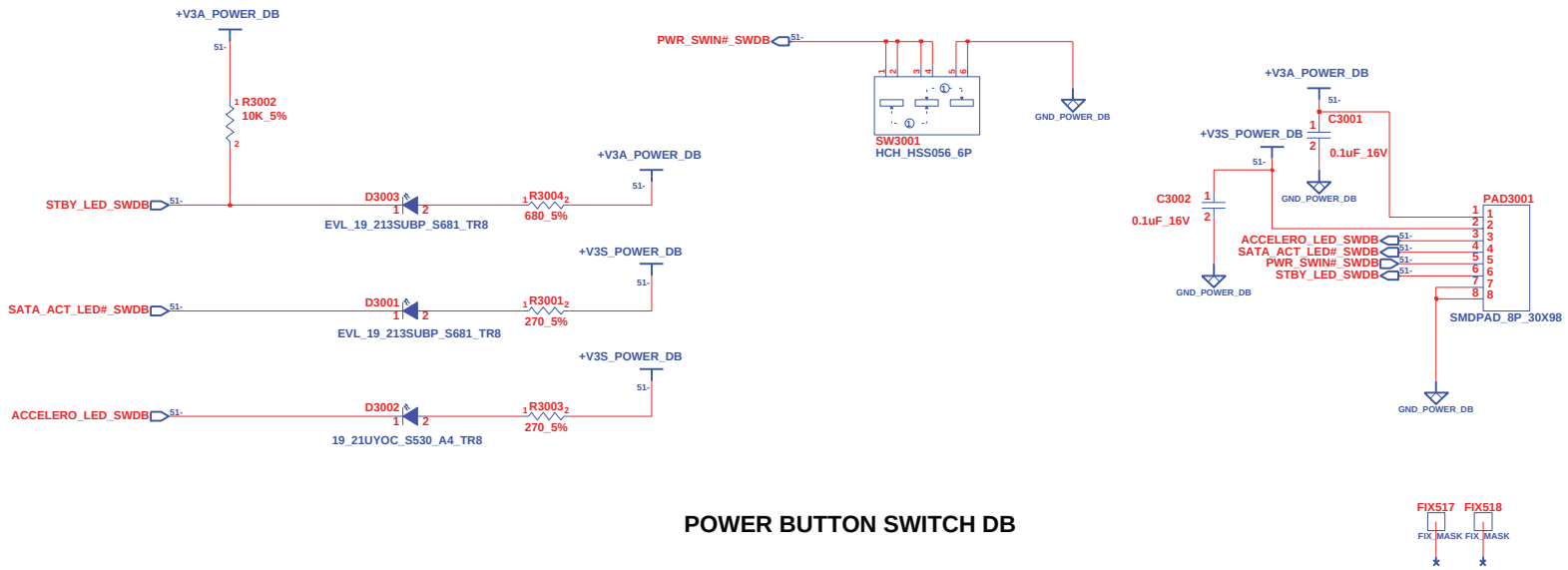

POWER BUTTON SWITCH DB

http://hobi-elektronika.net

CHANGE by	Phil_Huang	29-Sep-2008	

INVENTEC

TITLE *Galileo1.6*
POWER_BUTTON_DB

SIZE	CODE	DOC. NUMBER	REV
A3	CS	1310A2230401-0-MTR	AX2

SHEET 51 OF 52

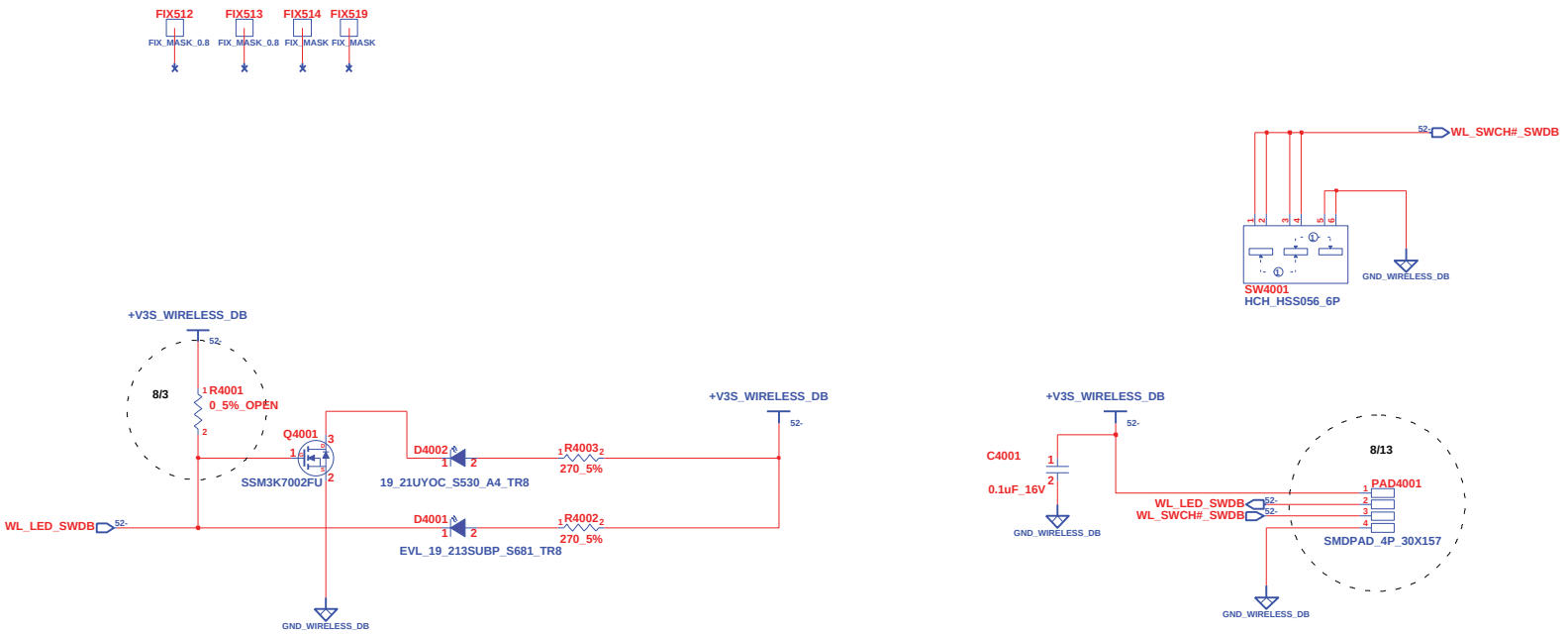

WIRELESS SWITCH DB

http://hobi-elektronika.net

CHANGE by	Phil_Huang	29-Sep-2008	

INVENTEC

TITLE *Galileo1.6*
WIRELESS_SWITCH_DB

SIZE	CODE	DOC. NUMBER	REV
A3	CS	1310A2230401-0-MTR	AX2

SHEET 52 OF 52