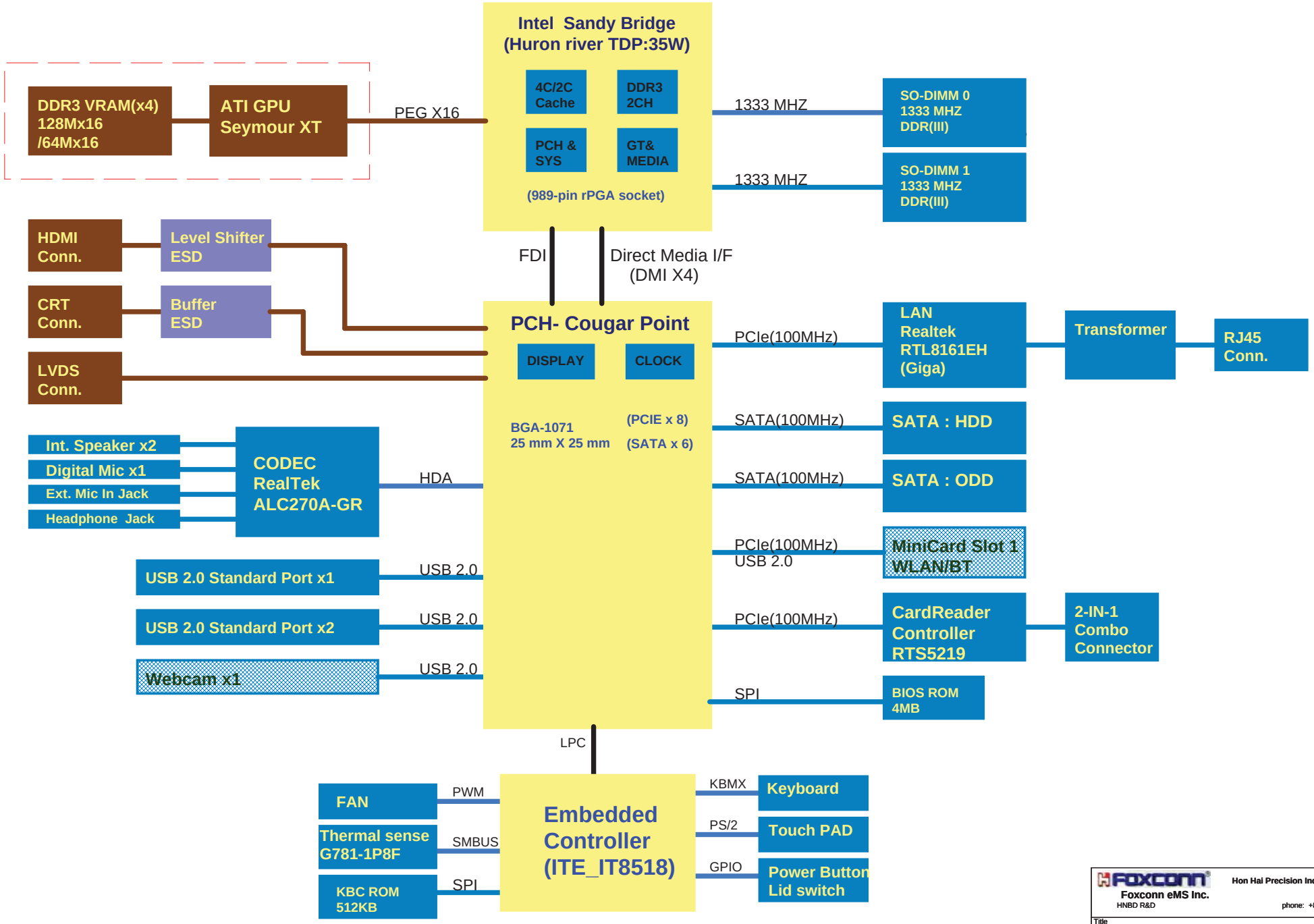

Foxconn
Foxconn eMS Inc.
HNBD R&D
Hon Hai Precision Industry Co. Ltd.
phone: +886-2-2799-6111

Title: SYSTEM BLOCK DIAGRAM

Size: Custom | Document Number: CHICAGO | Rev

Page Modified: Tuesday, March 08, 2011 08:29:00 (UTC/GMT) | Sheet 2 of 43

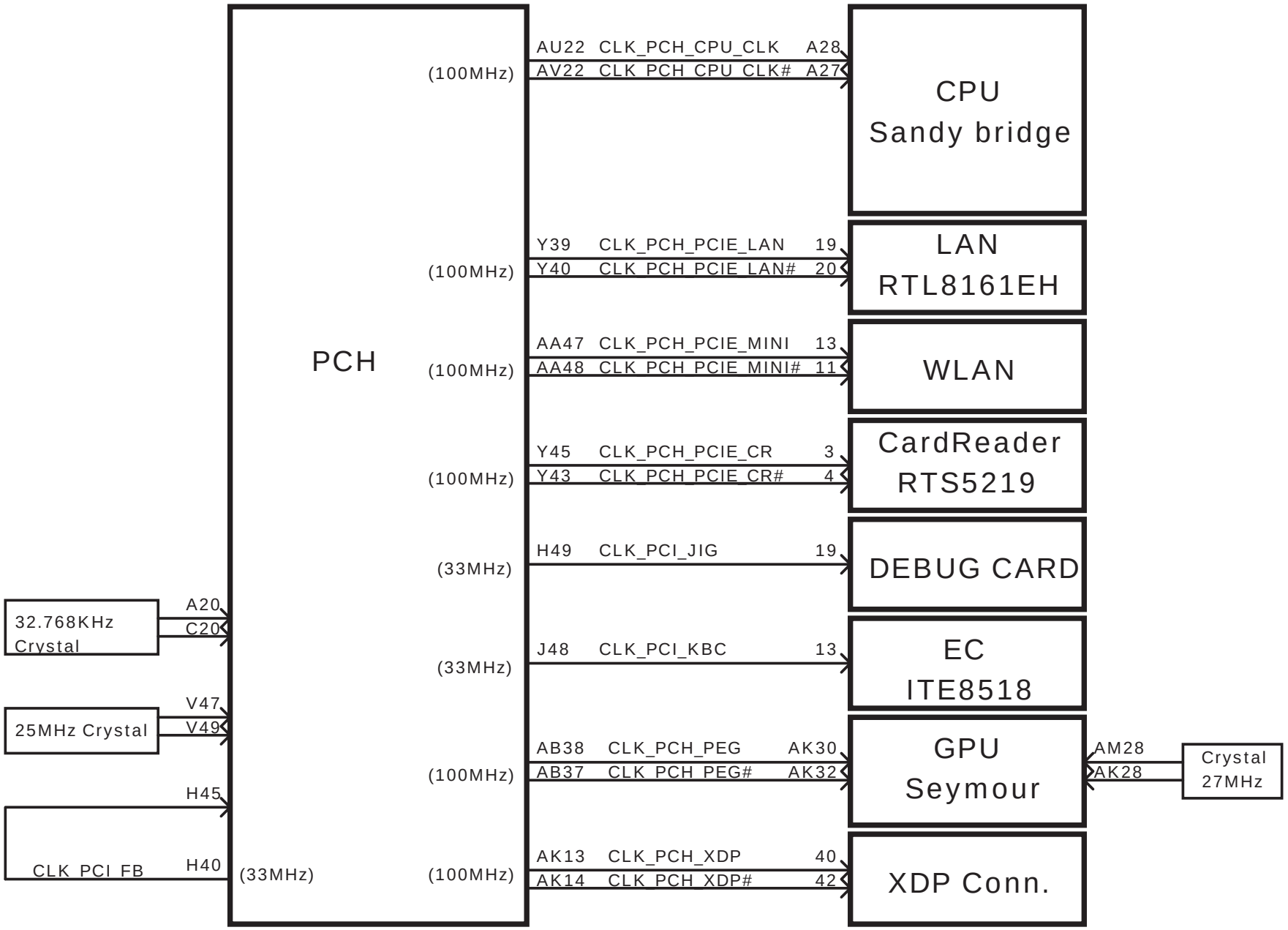

Hon Hai Precision Industry Co. Ltd.
Foxconn eMS Inc.
HNBD R&D
phone: +886-2-2799-6111

Title: CLOCK MAP

Size: Custom | Document Number: CHICAGO | Rev: MV

Page Modified: Tuesday, March 08, 2011 08:29:01 (UTC/GMT) | Sheet 3 of 43

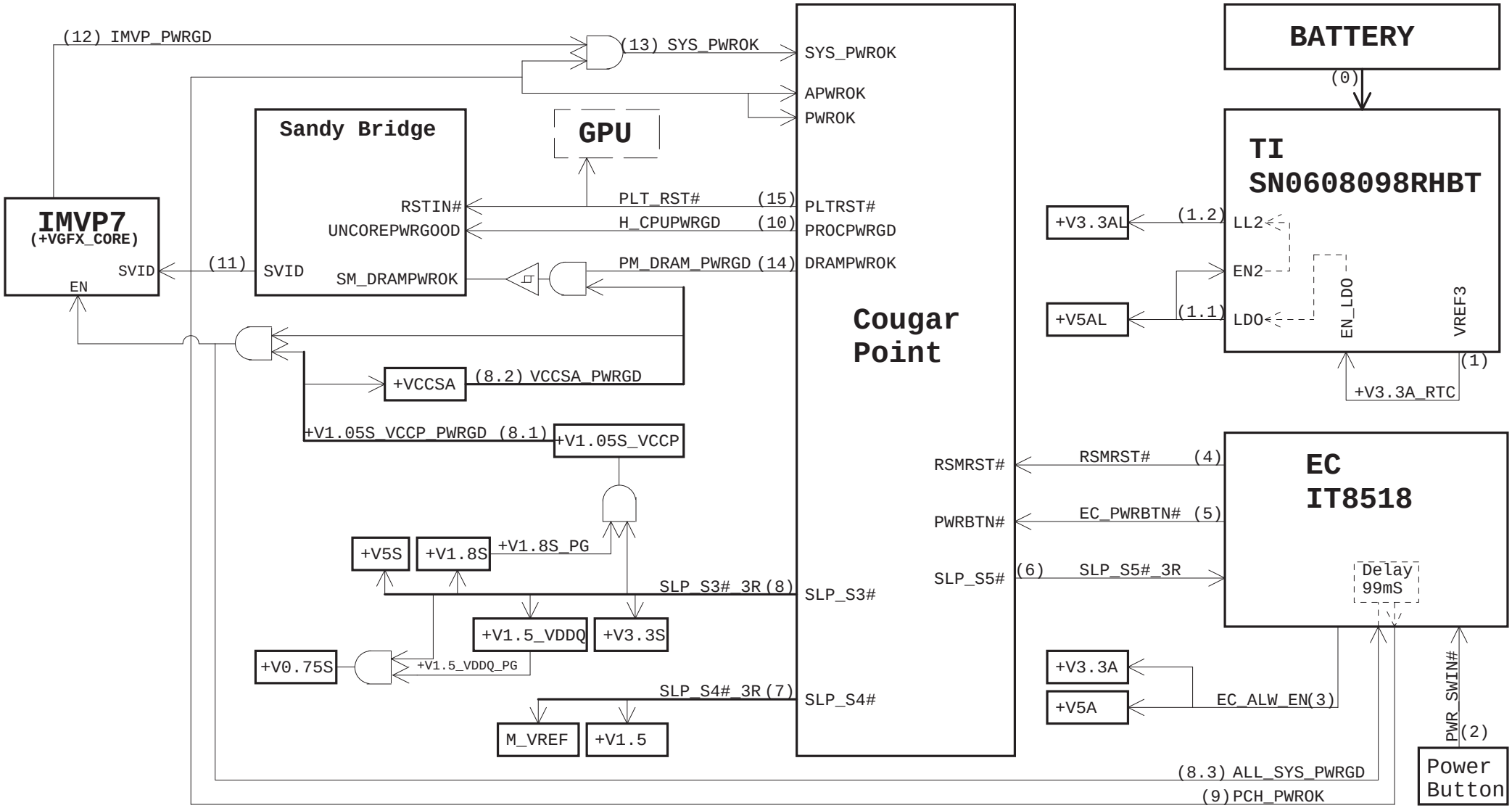

[redacted]
Foxconn eMS Inc.
HNBD R&D

Hon Hai Precision Industry Co. Ltd.
phone: +886-2-2799-6111

Title: POWER SEQUENCY DIAGRAM

Size	Document Number	Rev
Custom	CHICAGO	MV

Page Modified: Tuesday, March 08, 2011 08:29:00 (UTC/GMT) Sheet 4 of 43

POWER MAP

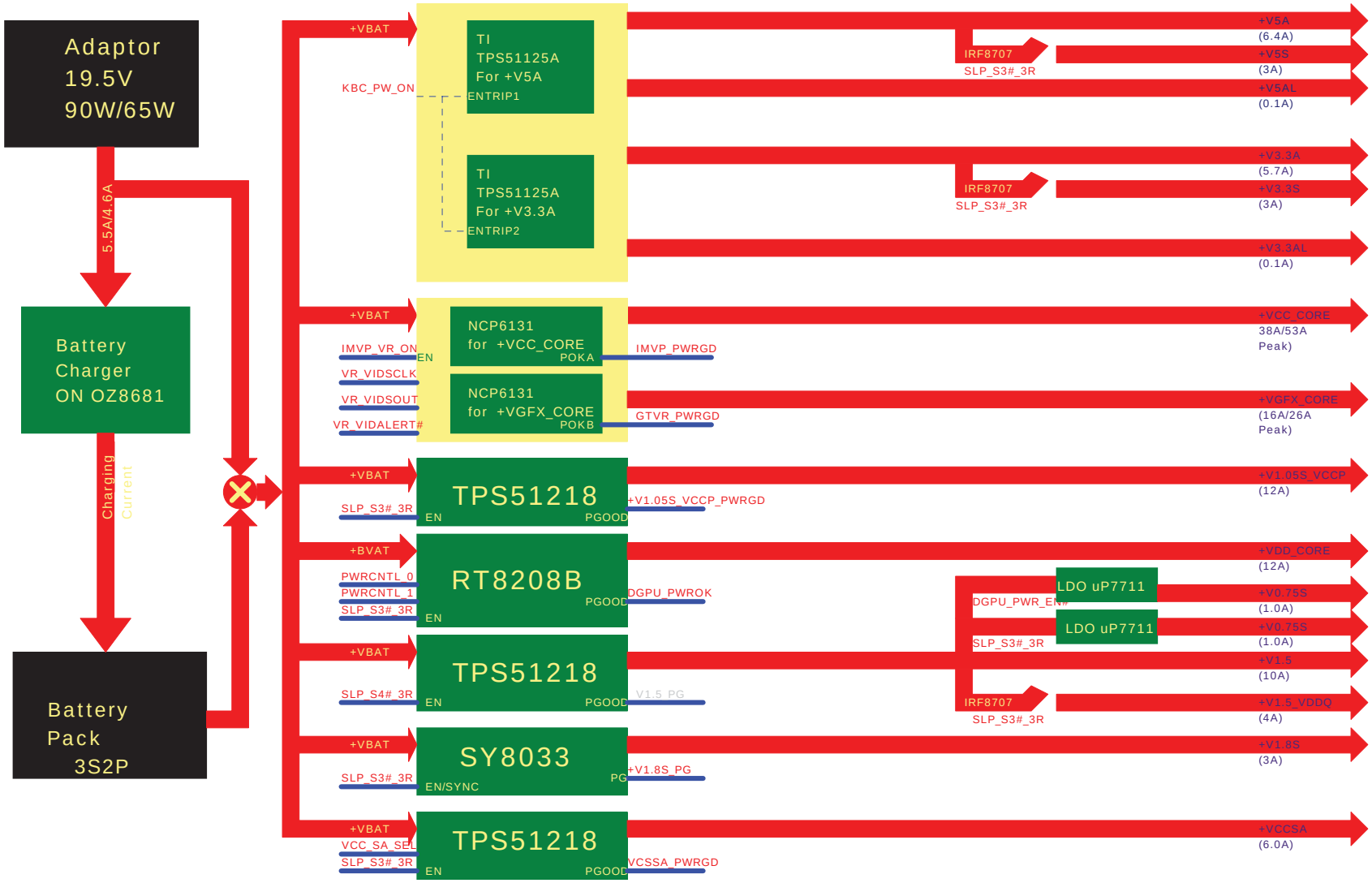

Foxconn
Foxconn eMS Inc.
HNBD R&D
Hon Hai Precision Industry Co. Ltd.
phone: +886-2-2799-6111

Title: POWER MAP

Size	Document Number	Rev
C	CHICAGO	MV

Page Modified: Tuesday, March 08, 2011 08:28:57 (UTC/GMT) | Sheet 5 of 43

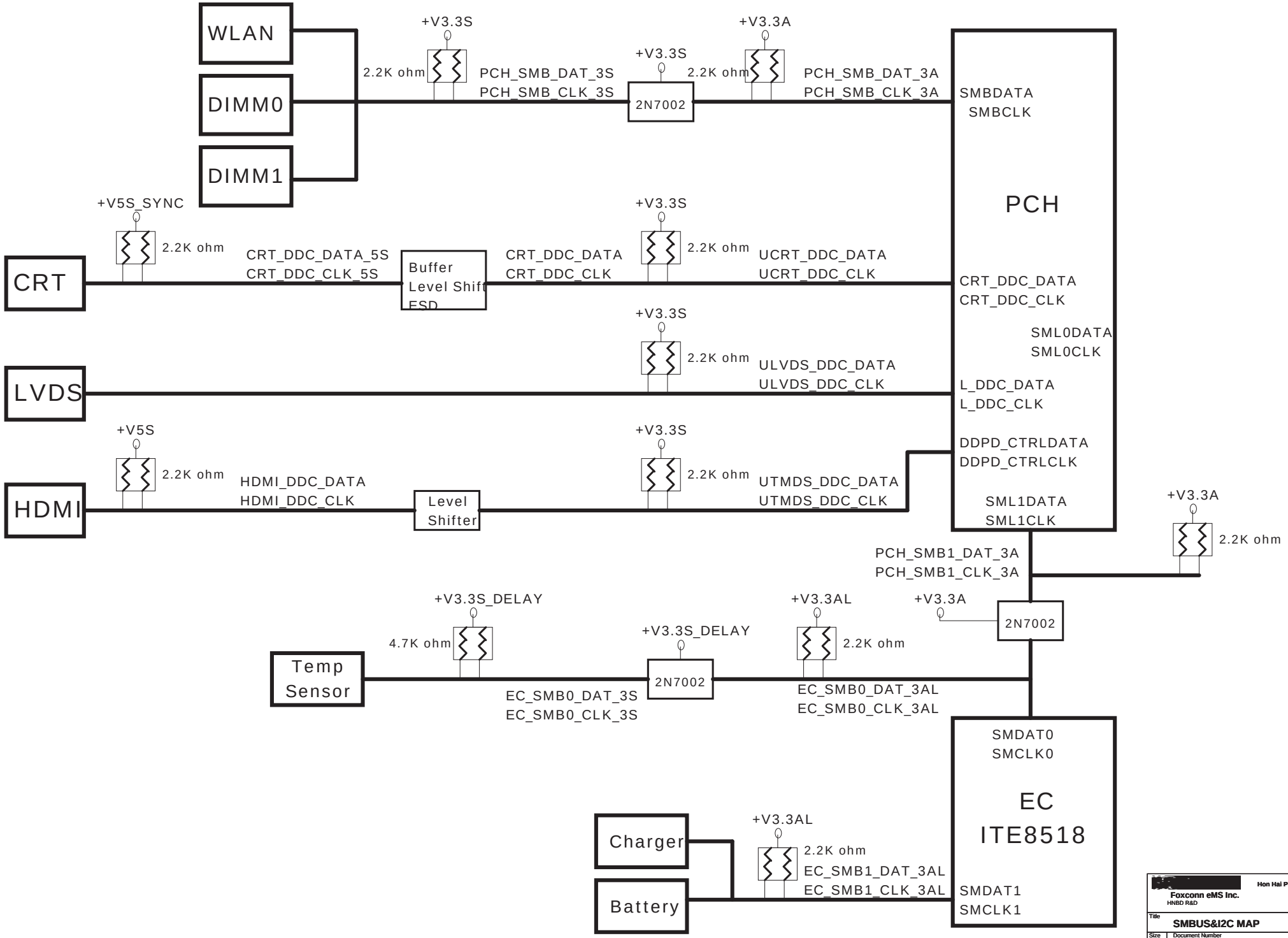

[redacted] Foxconn eMS Inc. HNBD R&D	Hon Hai Precision Industry Co. Ltd. phone: +886-2-2799-6111
Title	SMBUS&I2C MAP
Size: Custom	Document Number: CHICAGO	Rev: MV
Page Modified: Tuesday, March 08, 2011 08:28:57 (UTC/GMT)	Sheet 6 of 43

Hon Hai Precision Industry Co. Ltd.

Foxconn eMS Inc.

HNBD R&D

phone: +886-2-2799-6111

Title

BLANK

Size	Document Number	Rev
A	**CHICAGO**	**MV**

Page Modified: Tuesday, March 08, 2011 08:28:58 (UTC/GMT)

DC_JACK WIRE to BOARD CONNECTOR

2010.1203.0

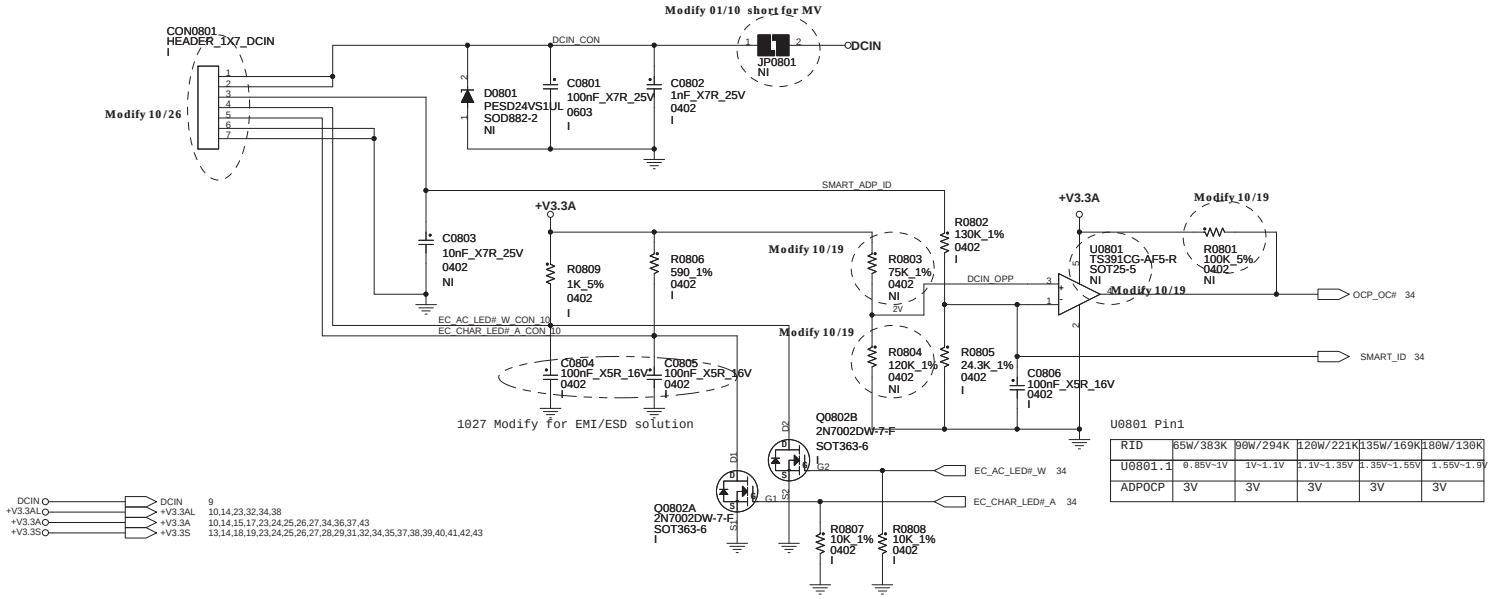

U0801 Pin1

RID	65W/383K	90W/294K	120W/221K	135W/169K	180W/130K
U0801.1	0.85V~1V	1V~1.1V	1.1V~1.35V	1.35V~1.55V	1.55V~1.9V
ADPOCP	3V	3V	3V	3V	3V

BATTERY CONNECTOR

2010.0914.0

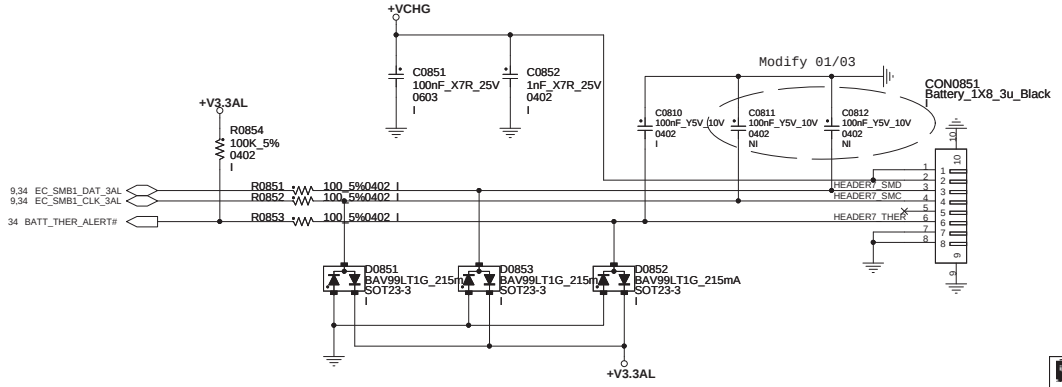

Foxconn eMS Inc.
HNBD R&D

Hon Hai Precision Industry Co. Ltd.
phone: +886-2-2799-6111

Title: DCIN/BATTERY

Size | Document Number: CHICAGO | Rev: MV

Page Modified: Tuesday, March 08, 2011 08:29:09 (UTC/GMT) | Sheet 8 of 43

BATTERY CHARGER

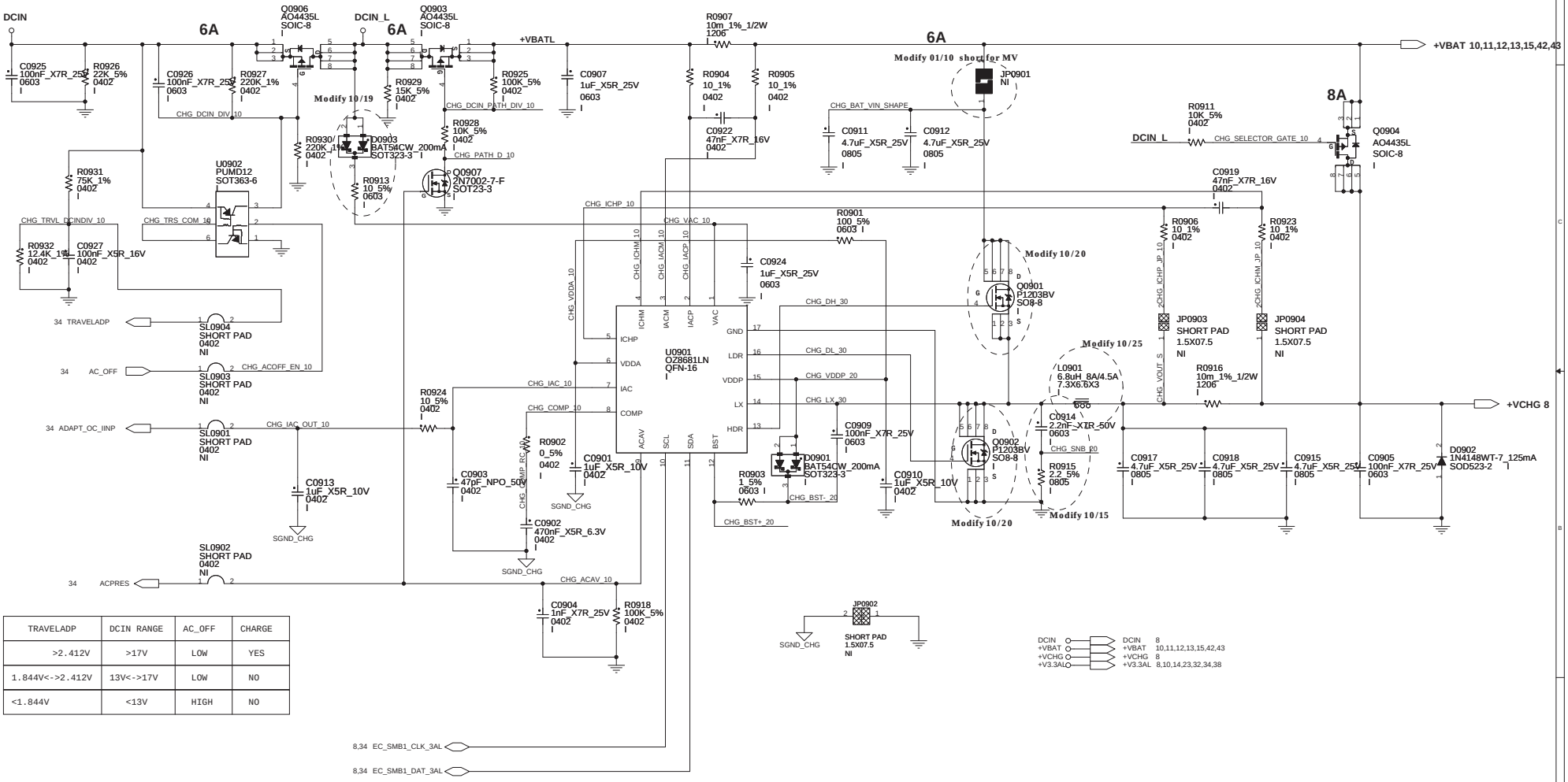

TRAVELADP	DCIN RANGE	AC_OFF	CHARGE
>2.412V	>17V	LOW	YES
1.844V<->2.412V	13V<->17V	LOW	NO
<1.844V	<13V	HIGH	NO

Hon Hai Precision Industry Co. Ltd.

Foxconn eMS Inc.
HNBD R&D

phone: +886-2-2799-6111

Title: PWR_Charger

Size: Custom | Document Number: CHICAGO | Rev: MV

Page Modified: Tuesday, March 08, 2011 08:28:58 (UTC/GMT) | Sheet 9 of 43

+V5A / +V3.3A POWER SUPPLY

2010.1103.0

+V5A:

1. I/P Current:
   Iin=Vo*Io/(0.75*Vin)=3.7A
2. Ripple Current:
   Irip=3.72A
3. Ripple Voltage:
   ESR/1=15mohm
   Vrip=55.8mV
4. Inductor Spec:
   Isat=13.5A
   Idc=6A
   DCR=30mohm
5. MOSFET Spec:
   H-side MOSFET: IRF8707PBF
   Rds(ON)=17.5mohm (Vgs=4.5 V)
   I cont = 11A (T =25 ℃)
   I peak = 88A (Pause =10 us)
6. Frequency:
   F=300KHz
7. OCP:
   Set = R1002 to 100K
   Vtrip= (R1002*10uA/9)-24mV=0.0655V
   Iocp=Vtrip/Rdson + Iripple/2 = 6.4A

+V3.3A:

1. I/P Current:
   Iin=Vo*Io/(0.75*Vin)=2.2A
2. Ripple Current:
   Irip=2.21A
3. Ripple Voltage:
   ESR/1=15mohm
   Vrip=33.15mV
4. Inductor Spec:
   Isat=13.5A
   Idc=6A
   DCR=30mohm
5. MOSFET Spec:
   L-side MOSFET: IRF8707PBF
   Rds(ON)=17.5mohm (Vgs=4.5 V)
   I cont = 11A (T =25 ℃)
   I peak = 88A (Pause =10 us)
6. Frequency:
   F=375KHz
7. OCP:
   Set = R1003 to 100K
   Vtrip= (R1003*10uA/9)-24mV=0.0655V
   Iocp=Vtrip/Rdson + Iripple/2 = 5.7A

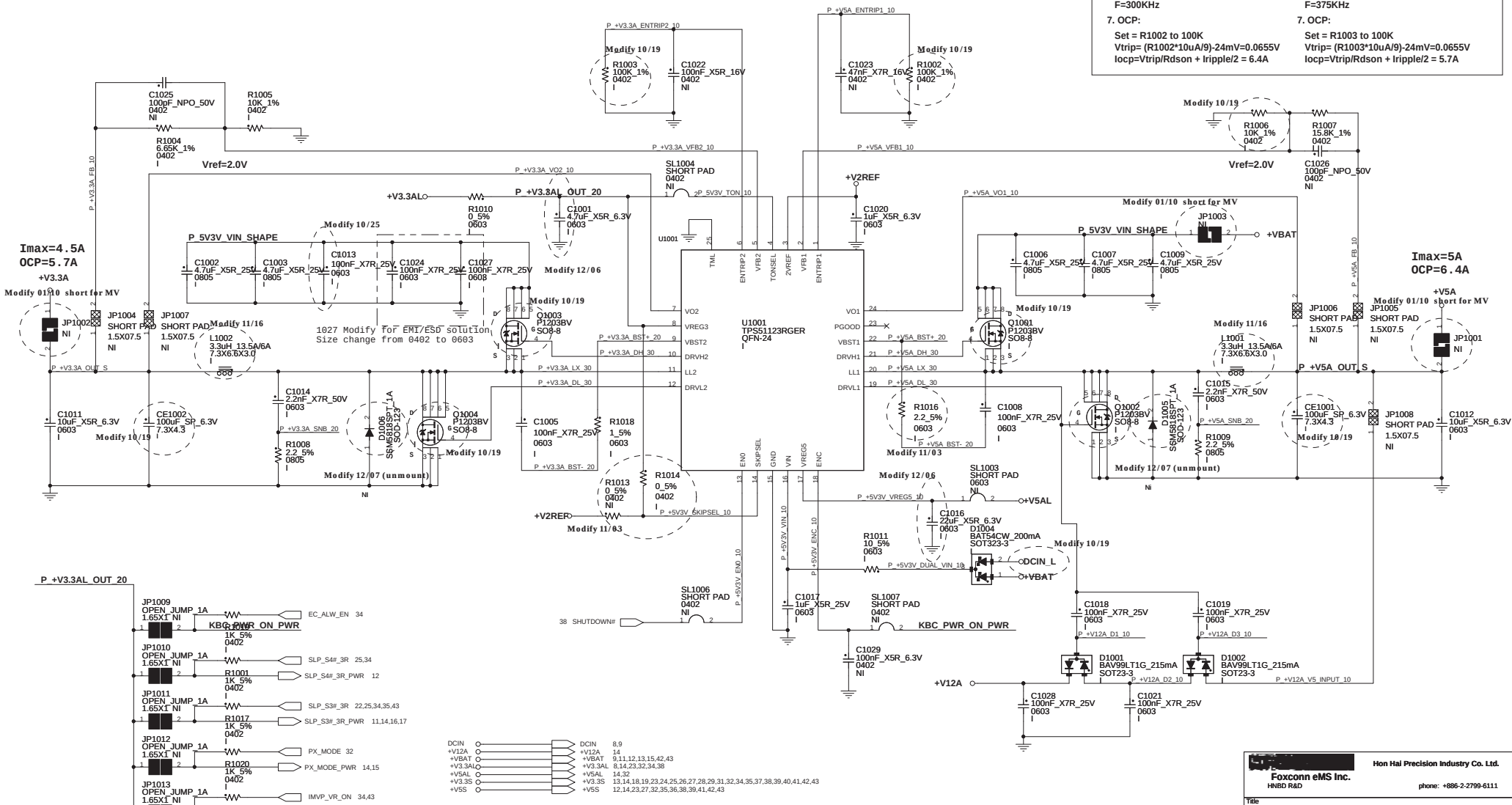

Foxconn eMS Inc. HNBD R&D	Hon Hai Precision Industry Co. Ltd. phone: +886-2-2799-6111
Title: 5V/3.3V	
Size: C	Document Number: CHICAGO	Rev: MV
Page Modified: Tuesday, March 08, 2011 08:28:59 (UTC/GMT)	Sheet 10 of 43

+VTT POWER SUPPLY

2010.1103.0

+V1.05S_VCCP:

1. I/P Current:
   Iin=Vo*Io/(0.75*Vin)=1.24A
2. Ripple Current:
   Irip=3.42A
3. Ripple Voltage:
   ESR/1=9mohm
   Vrip=30.78mV
4. Inductor Spec:
   Isat=36A
   Idc=18A
   DCR=3.3mohm
5. MOSFET Spec:

H-side MOSFET: IRF8707PBF		L-side MOSFET: IRF8707PBF	
Rds(ON)=17.5mohm	(Vgs=4.5 V)	Rds(ON)=17.5mohm	(Vgs=4.5 V)
I cont = 11A	(T =25 ℃)	I cont = 11A	(T =25 ℃)
I peak = 88A	(Pause =10 us)	I peak = 88A	(Pause =10 us)

6. Frequency:
   F=290KHz (R1102=0ohm)
7. OCP:
   Set = R1107 to 120K
   Vtrip= R1107*10uA=1.2V
   Iocp=(Vtrip/8*Rdson) + Iripple/2 = 10A

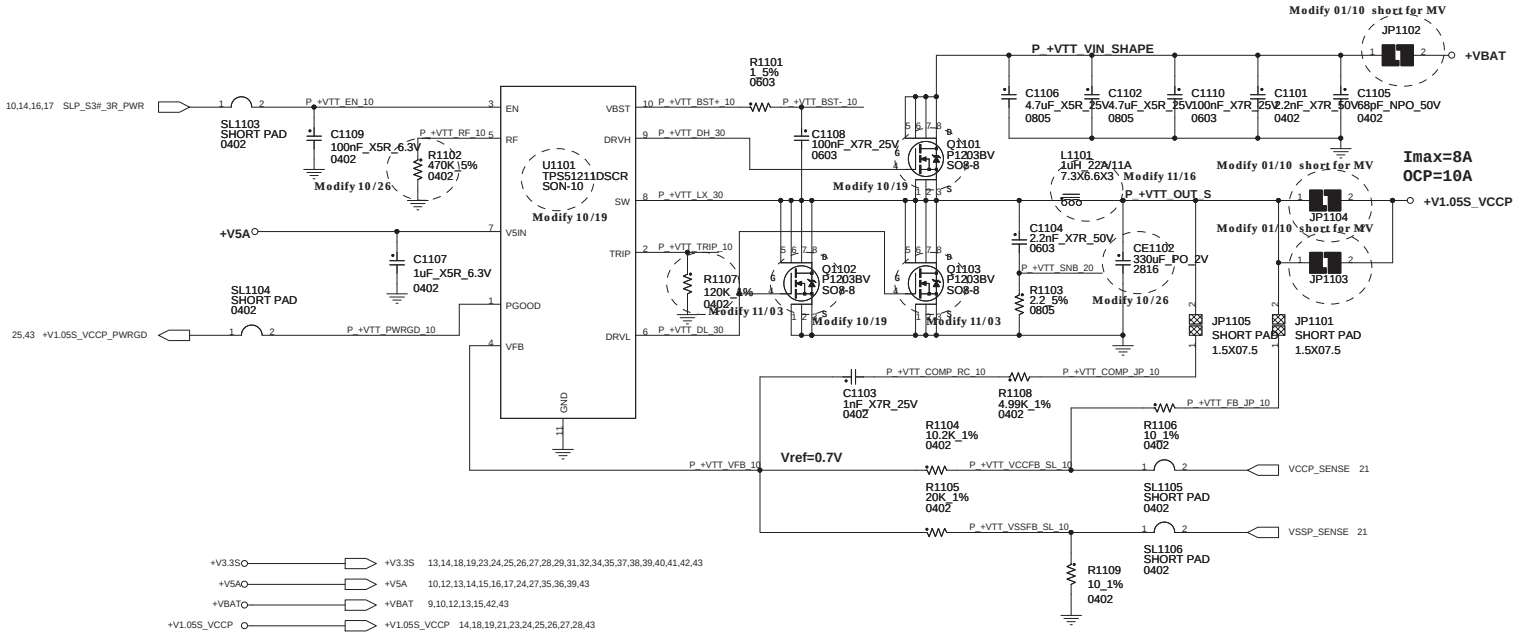

[redacted]
Foxconn eMS Inc.
HNBD R&D

Hon Hai Precision Industry Co. Ltd.
phone: +886-2-2799-6111

Title: +VTT

Size	Document Number	Rev
C	CHICAGO	MV

Page Modified: Tuesday, March 08, 2011 08:28:59 (UTC/GMT) | Sheet 11 of 43

+V1.5 POWER SUPPLY

2010.1026.0

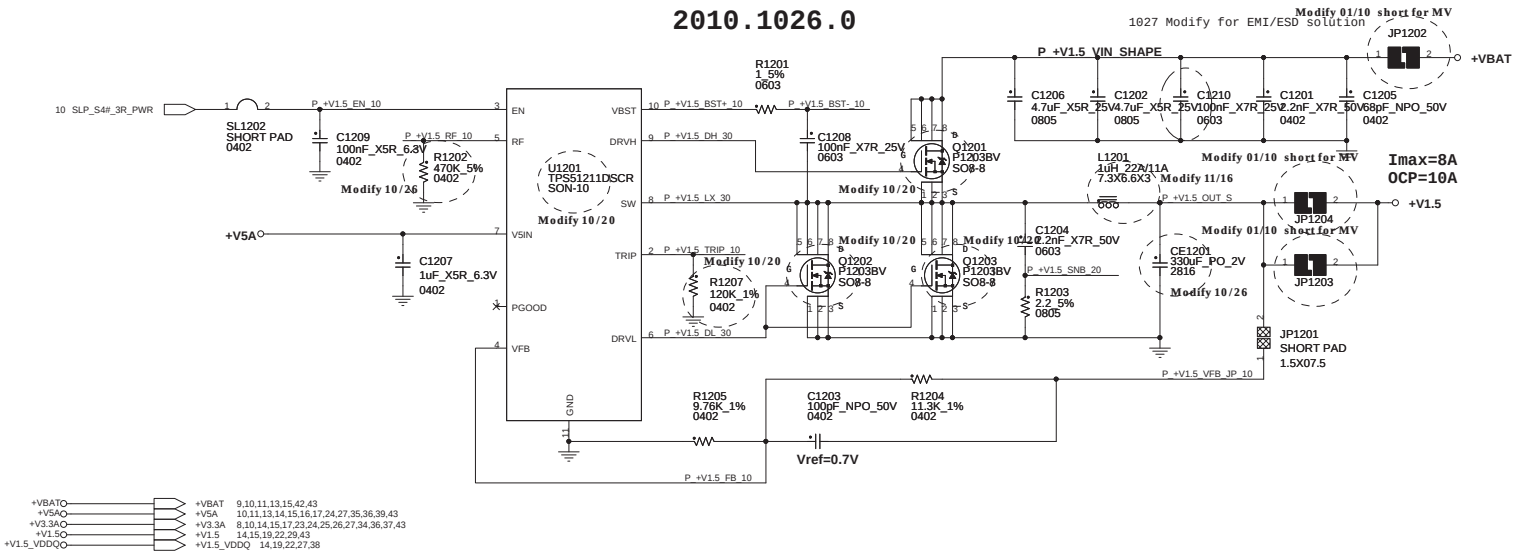

+V1.5:

1. I/P Current:
   Iin=Vo*Io/(0.75*Vin)=1.78A
2. Ripple Current:
   Irip=3.34A
3. Ripple Voltage:
   ESR/1=9mohm
   Vrip=30.6mV
4. Inductor Spec:
   Isat=36A
   Idc=18A
   DCR=3.3mohm
5. MOSFET Spec:

H-side MOSFET: IRF8707PBF		L-side MOSFET: IRF8707PBF	
Rds(ON)=17.5mohm	(Vgs=4.5 V)	Rds(ON)=17.5mohm	(Vgs=4.5 V)
I cont = 11A	(T =25 ℃)	I cont = 11A	(T =25 ℃)
I peak = 88A	(Pause =10 us)	I peak = 88A	(Pause =10 us)

6. Frequency:
   F=290KHz (R0902=0ohm)
7. OCP:
   Set = R1207 to 120K
   Vtrip= R1207*10uA=1.2V
   Iocp=(Vtrip/8*Rdson) + Iripple/2 = 10A

+V0.75S POWER SUPPLY

2010.1026.0

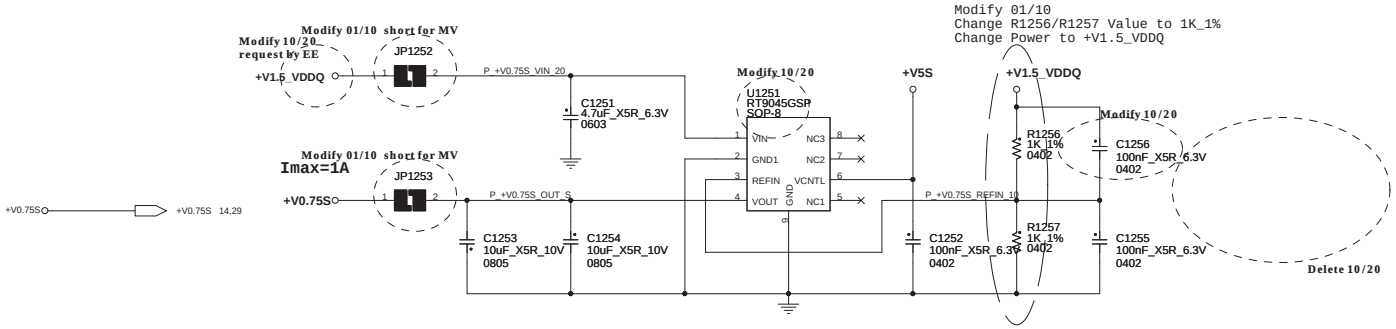

[redacted] Foxconn eMS Inc. HNBD R&D	Hon Hai Precision Industry Co. Ltd. phone: +886-2-2799-6111	
Title: 1.5VDDR3/0.75V		
Size: C	Document Number: CHICAGO	Rev: MV
Page Modified: Tuesday, March 08, 2011 08:28:59 (UTC/GMT)	Sheet 12 of 43	

2010.1026.0

IMVP7 CPU VCORE POWER SUPPLY

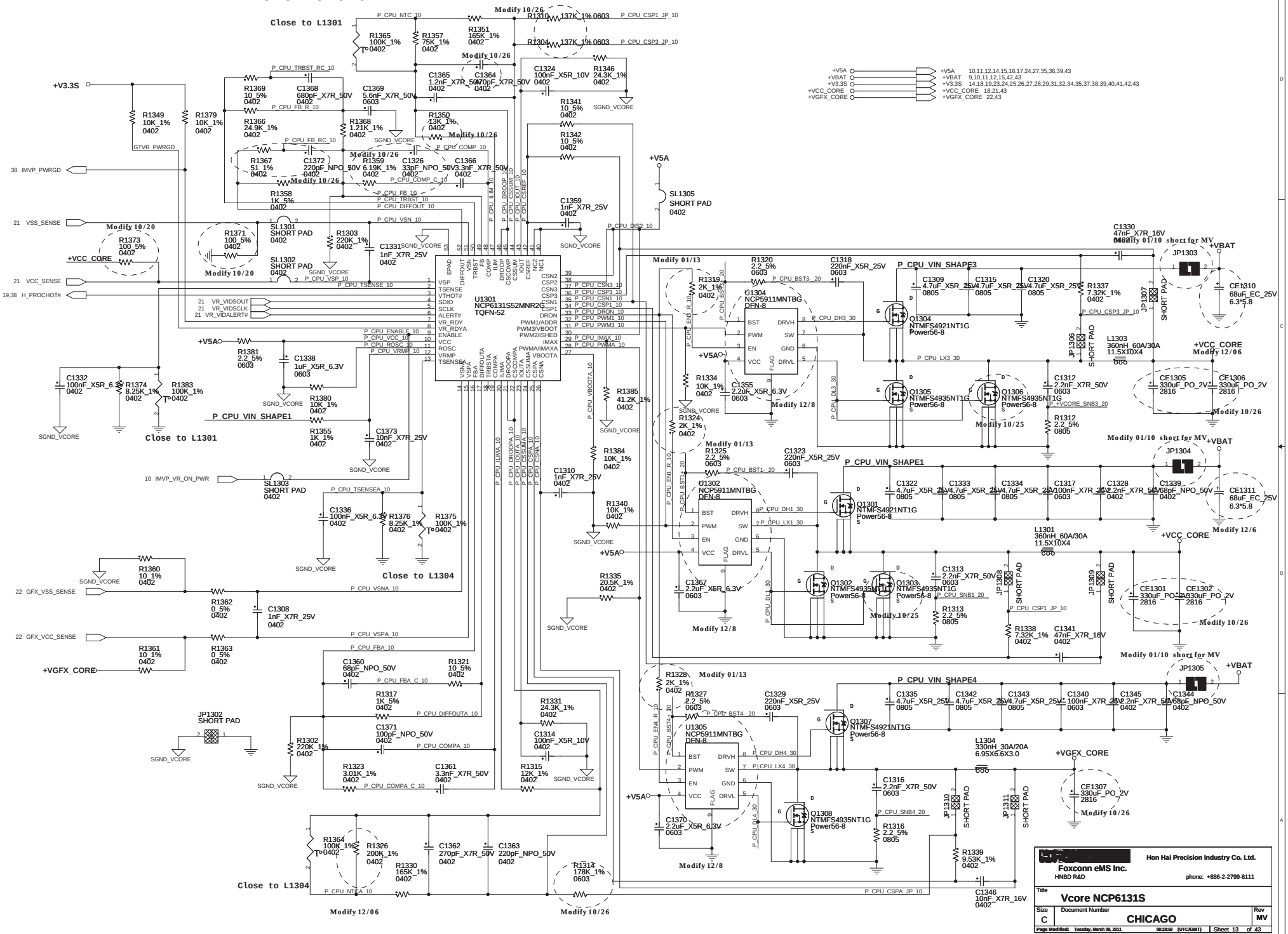

OTHER POWER / DISCHARGE CIRCUITS

2010.1026.0

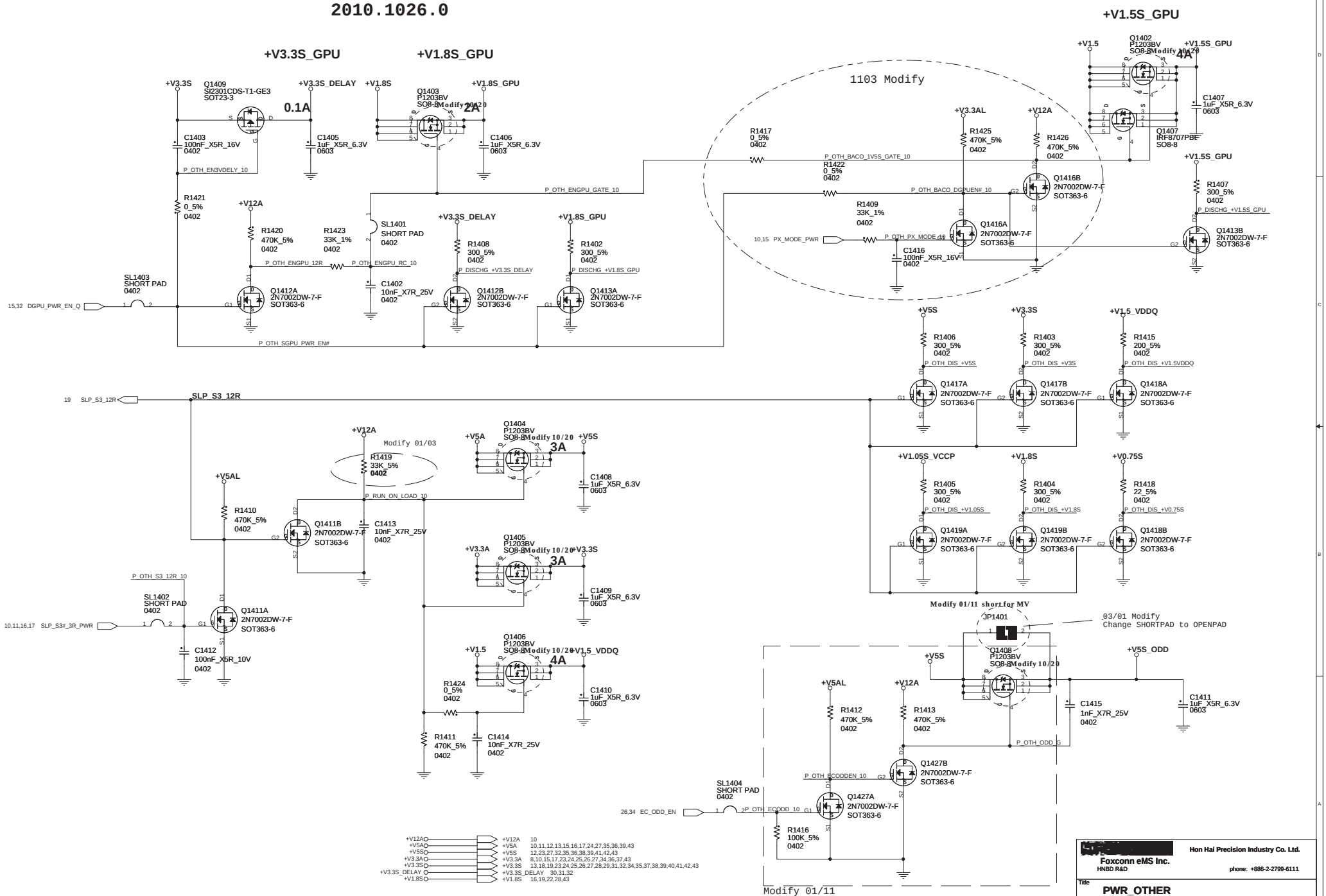

+VDD_CORE POWER SUPPLY

2010.1026.0

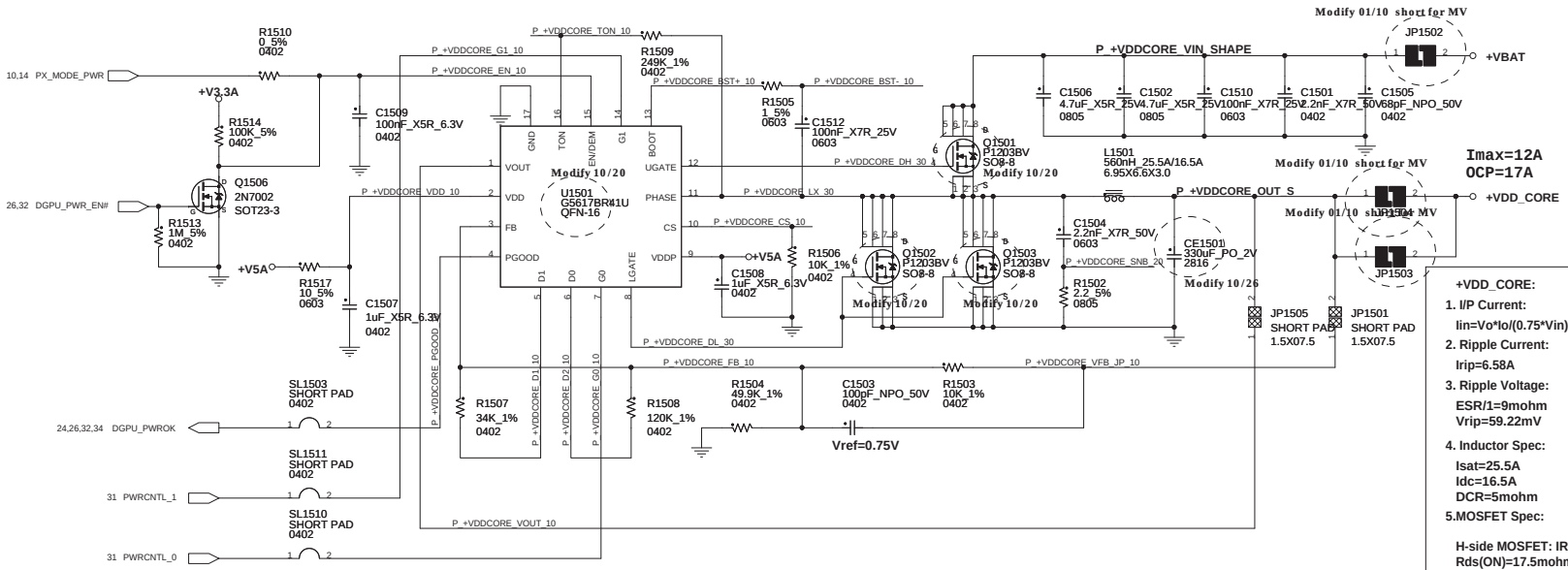

PWRCNTL_1	PWRCNTL_0	VDD_CORE
0	---	1.121V
---	---	---
1	---	0.9V
---	---	---

+VDD_CORE:

1. I/P Current:
   Iin=Vo*Io/(0.75*Vin)=1.48A
2. Ripple Current:
   Irip=6.58A
3. Ripple Voltage:
   ESR/1=9mohm
   Vrip=59.22mV
4. Inductor Spec:
   Isat=25.5A
   Idc=16.5A
   DCR=5mohm
5. MOSFET Spec:

H-side MOSFET: IRF8707PBF		L-side MOSFET: IRF8707PBF	
Rds(ON)=17.5mohm	(Vgs=4.5 V)	Rds(ON)=17.5mohm	(Vgs=4.5 V)
I cont = 11A	(T =25 ℃)	I cont = 11A	(T =25 ℃)
I peak = 88A	(Pause =10 us)	I peak = 88A	(Pause =10 us)

6. Frequency:
   TON=9.6P*R1509*(VOUT+0.1) / (VIN-0.3)+50ns=206ns
   F=VOUT/(VIN*TON)=286KHz
7. OCP:
   Set = R1506 to 10K
   Vtrip= R1206*10uA=0.1V
   Iocp=(Vtrip/Rdson) + Iripple/2 = 17A

2010.1020.0 +VPCIE POWER SUPPLY

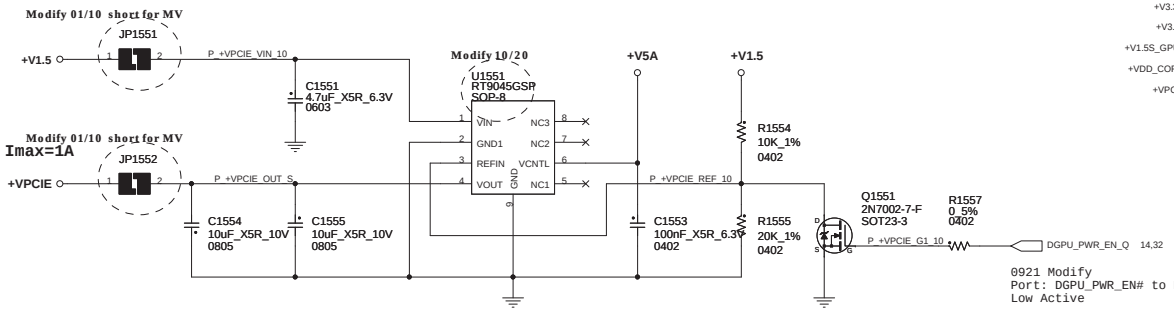

0921 Modify
Port: DGPU_PWR_EN# to DGPU_PWR_EN_Q
Low Active

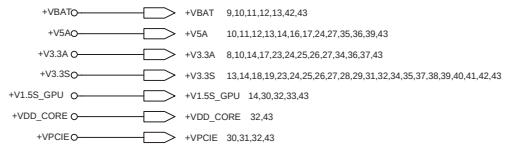

[redacted]
Foxconn eMS Inc.
HNBD R&D
Hon Hai Precision Industry Co. Ltd.
phone: +886-2-2799-6111

Title: VATVDD/+VPCIE

Size: C | Document Number: CHICAGO | Rev: MV

Page Modified: Tuesday, March 08, 2011 08:28:58 (UTC/GMT) | Sheet 15 of 43

+V1.8S POWER SUPPLY

2010.1025.0

+V1.8S:

1. I/P Current:

Iin=Vo*Io/(0.75*Vin)=1.44A

2. Ripple Current:

Irip=0.53A

3. Ripple Voltage:

ESR/3=3.3mohm
Vrip=1.75mV

4. Inductor Spec:

Isat=14A
Idc=8A
DCR=20mohm

5.MOSFET Spec:

H-side P-MOSFET:	L-side N-MOSFET:
Rds(ON)=110mohm (Vgs=4.5 V)	Rds(ON)=75mohm (Vgs=4.5 V)

6. Frequency:

F=1MHz (min=800KHz, max=1.2MHz)

7. OCP:

Iocp=4A(min)/4.5A(typ)/5A(max)

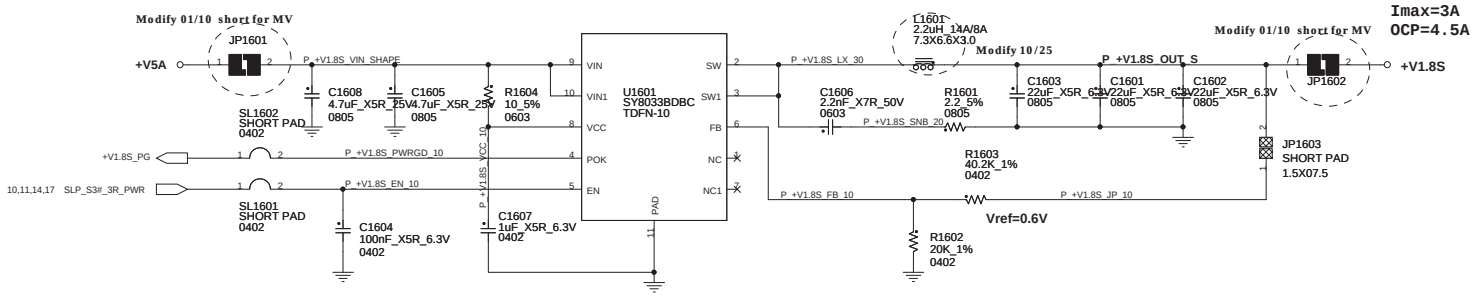

[redacted] Foxconn eMS Inc. HNBD R&D	Hon Hai Precision Industry Co. Ltd. phone: +886-2-2799-6111
Title	+1.8VS
Size C	Document Number CHICAGO	Rev MV
Page Modified: Tuesday, March 08, 2011 08:29:09 (UTC/GMT)	Sheet 16 of 43

+VCCSA POWER SUPPLY

2010.1026.0

+VCCSA:
1. I/P Current:
   Iin=Vo*Io/(0.75*Vin)=2.18A
2. Ripple Current:
   Irip=1.39A
3. Ripple Voltage:
   ESR/4=1mohm
   Vrip=1.39mV
4. Inductor Spec:
   Isat=26A
   Idc=17.5A
   DCR=4.2mohm
5.MOSFET Spec:

6. Frequency:
   F=1MHz (R1705=Open)
7. OCP:
   Min : 6A / Typ : 7.5A

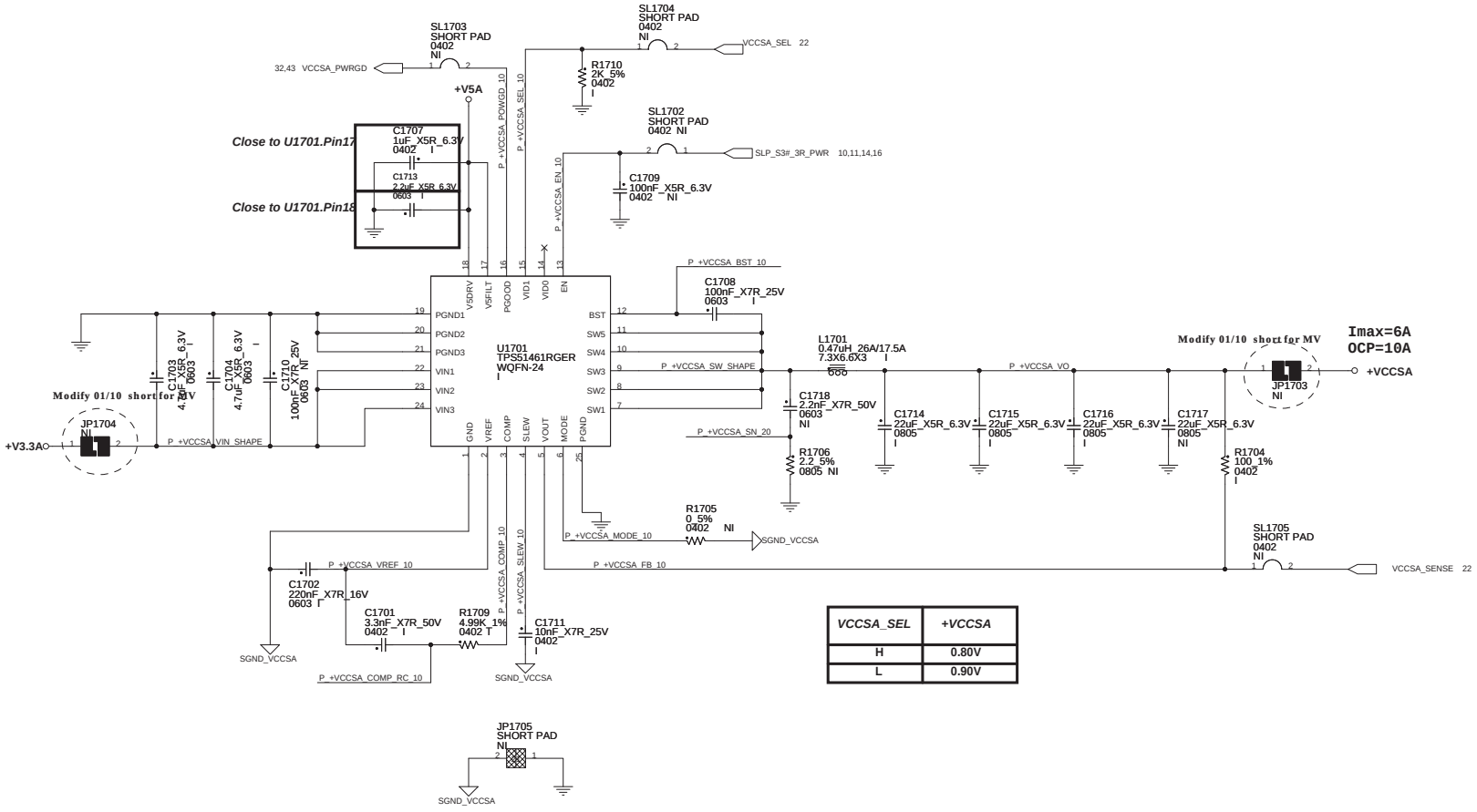

VCCSA_SEL	+VCCSA
H	0.80V
L	0.90V

[redacted]
Foxconn eMS Inc.
HNBD R&D
Hon Hai Precision Industry Co. Ltd.
phone: +886-2-2799-6111

Title: VCCSA
Size: C
Document Number: CHICAGO
Rev: MV
Page Modified: Tuesday, March 08, 2011 08:28:59 (UTC/GMT)

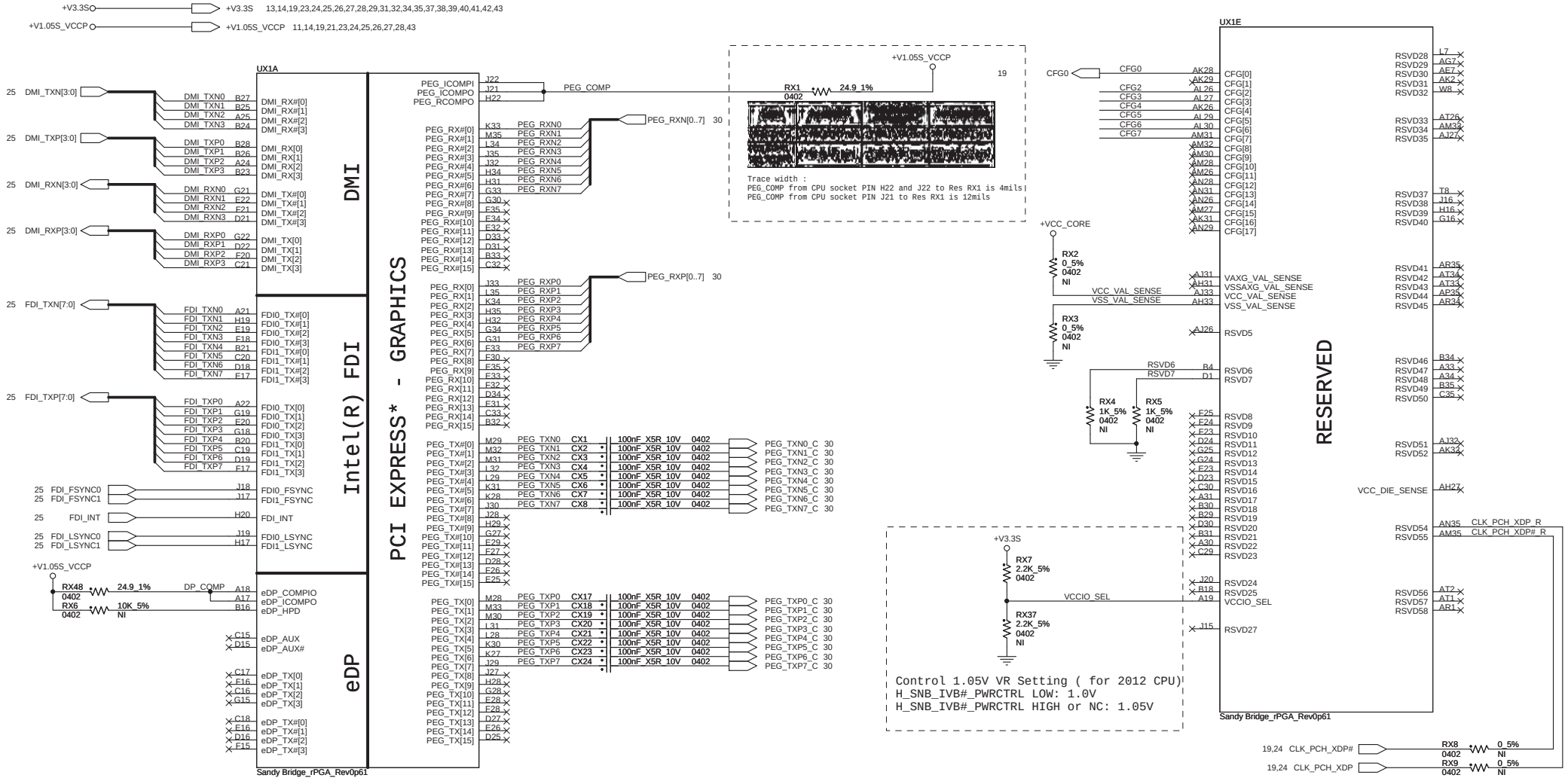

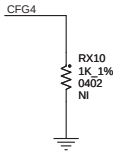

Display Port Presence Strap

CFG4 1:(Default) Disabled;No Physical Display Port attached to Embedded Display Port

0:Enabled;An external Port is connect to Embedded Display Port

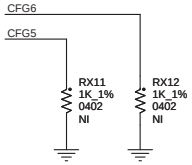

PCIE Port Bifurcation Straps

CFG[6:5] 11:(Default) x16 - Device 1 functions & 2 disabled

10:x8,x8 - Device 1 function 1 enabled ; function 2 disabled

01:Reserved - (Device 1 function 1 disabled ; function 2 enabled

00:x8,x4,x4 - (Device 1 functions 1 & 2 enabled

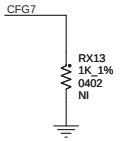

PEG DEFER TRAINING

CFG7 1:(Default) PEG Train immediately following xxRESETB de assertion

0:PEG Wait for BIOS for training

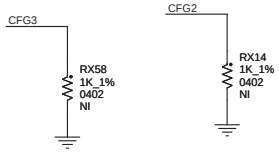

PEG Static Lane Reversal - CFG2 is for the 16x

CFG2 1:(Default) Normal Operation;Lane # definition matches socket pin map definition

0:Lane Reversed

Foxconn eMS Inc.
HNBD R&D
Hon Hai Precision Industry Co. Ltd.
phone: +886-2-2799-6111

Title: PROCESSOR(1 of 5)

Size: Custom | Document Number: CHICAGO | Rev: MV

Page Modified: Tuesday, March 08, 2011 08:29:01 (UTC/GMT) | Sheet 18 of 43

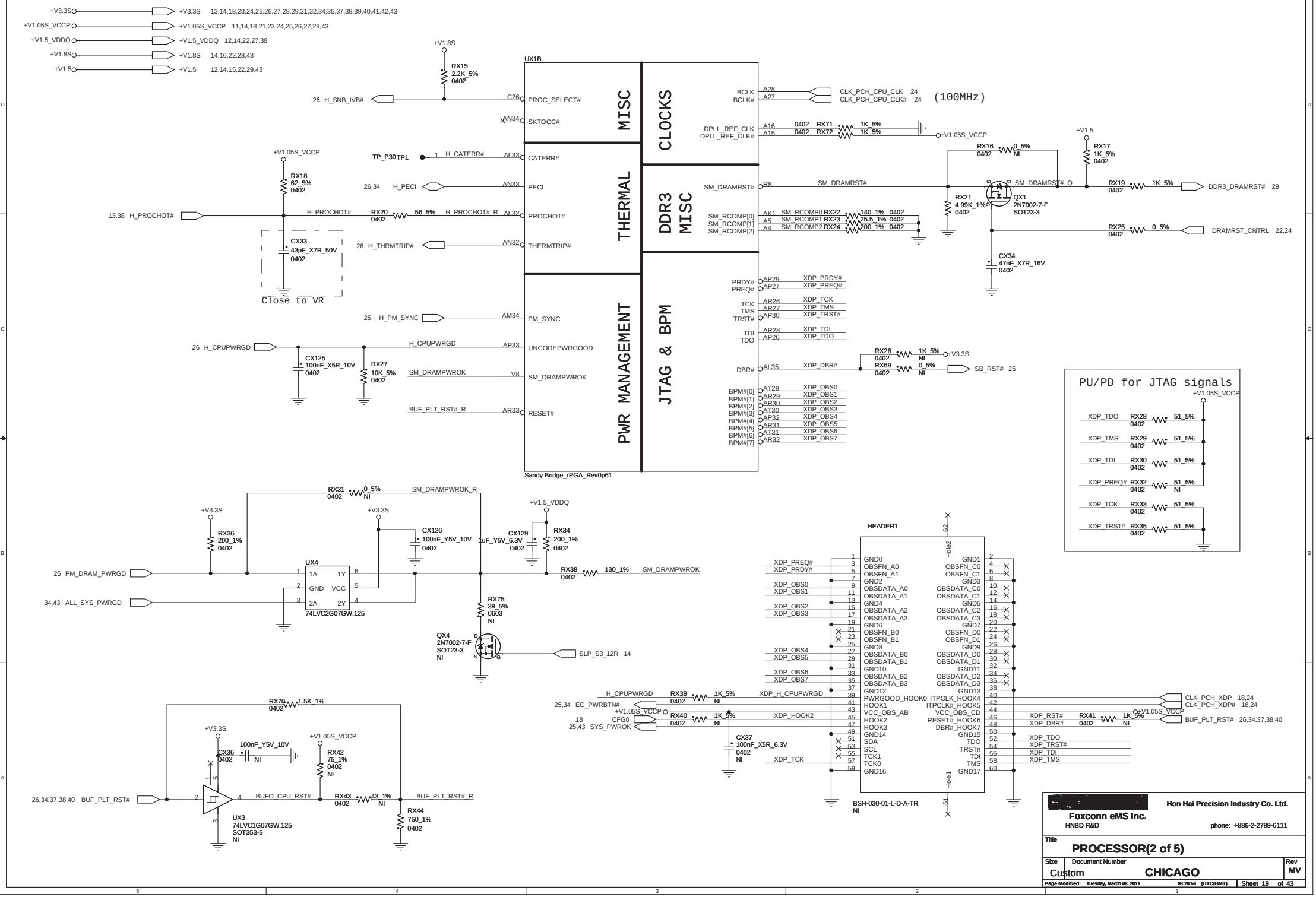
+V3.3S 13,14,18,23,24,25,26,27,28,29,31,32,34,35,37,38,39,40,41,42,43
+V1.05S_VCCP 11,14,18,21,23,24,25,26,27,28,43
+V1.5_VDDQ 12,14,22,27,38
+V1.8S 14,16,22,28,43
+V1.5 12,14,15,22,29,43
UX1B
MISC
CLOCKS
THERMAL
DDR3 MISC
JTAG & BPM
PWR MANAGEMENT
PROC_SELECT#
SKTOCC#
CATERR#
PECI
PROCHOT#
THERMTRIP#
PM_SYNC
UNCOREPWRGOOD
SM_DRAMPWROK
RESET#
Sandy Bridge_rPGA_Rev0p61
(100MHz)
Close to VR
PU/PD for JTAG signals
HEADER1
BSH-030-01-L-D-A-TR
74LVC2G07GW.125
74LVC1G07GW.125
2N7002-7-F
Foxconn eMS Inc.
HNBD R&D
Hon Hai Precision Industry Co. Ltd.
phone: +886-2-2799-6111
PROCESSOR(2 of 5)
Size Custom
Document Number CHICAGO
Rev MV
Page Modified: Tuesday, March 08, 2011 08:28:56 (UTC/GMT)
Sheet 19 of 43

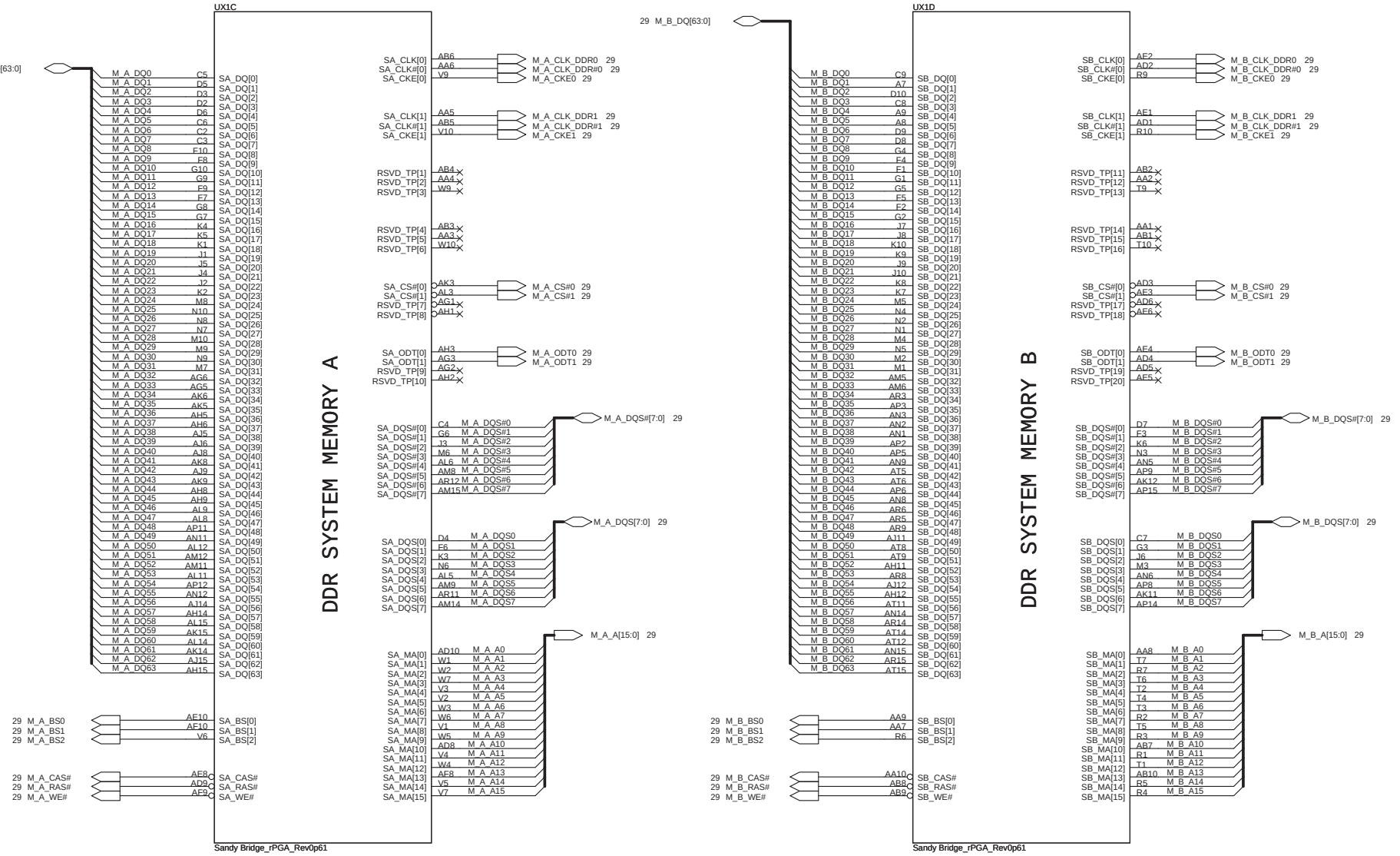

[redacted]

Foxconn eMS Inc.
HNBD R&D

Hon Hai Precision Industry Co. Ltd.
phone: +886-2-2799-6111

Title: **PROCESSOR(3 of 5)**

Size	Document Number	Rev
Custom	**CHICAGO**	**MV**

Page Modified: Tuesday, March 08, 2011 08:29:00 (UTC/GMT) Sheet 20 of 43

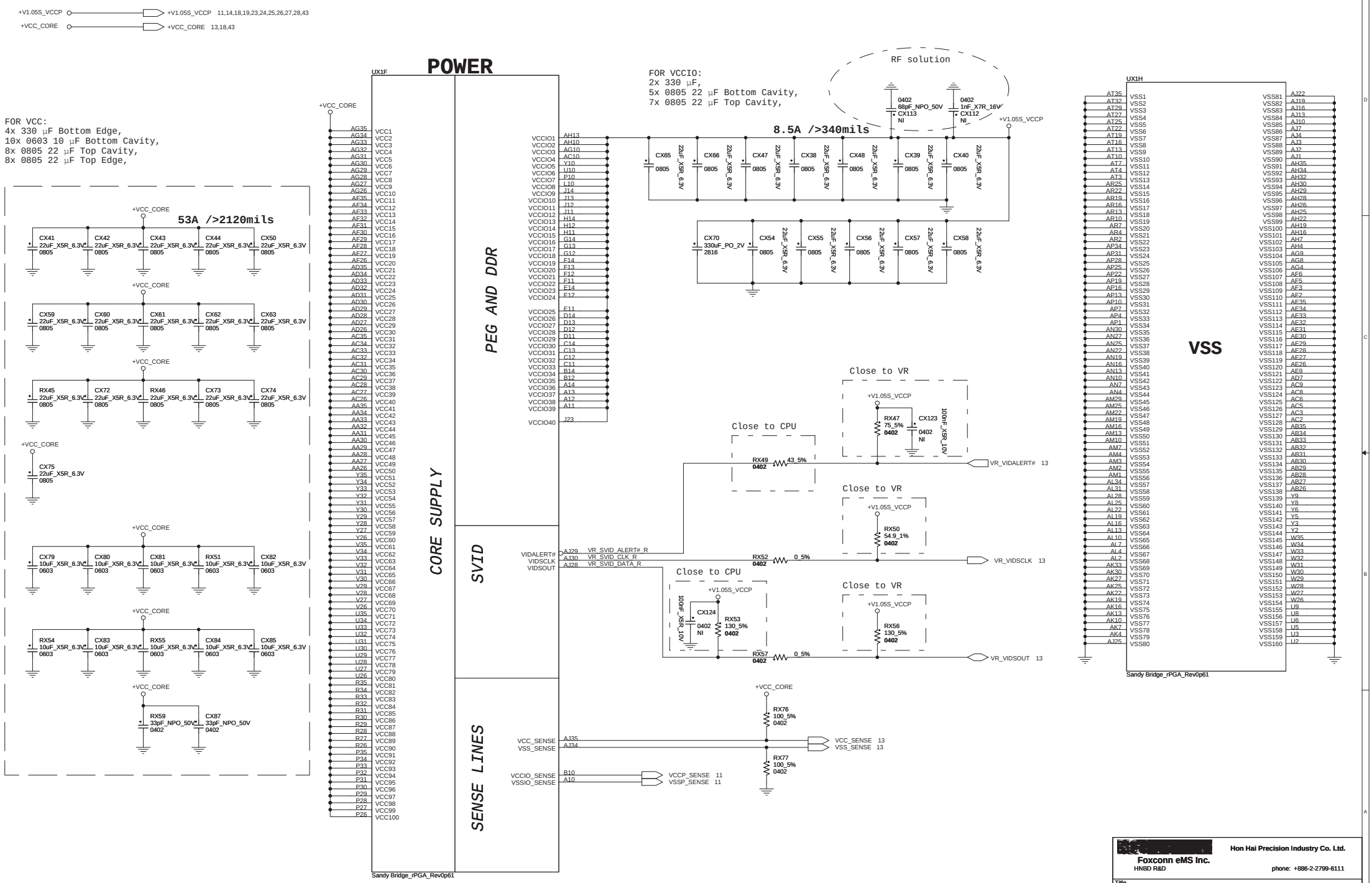

Hon Hai Precision Industry Co. Ltd.

Foxconn eMS Inc.
HNBD R&D

phone: +886-2-2799-6111

Title: PROCESSOR(4 of 5)

Size: Custom | Document Number: CHICAGO | Rev: MV

Page Modified: Tuesday, March 08, 2011 08:29:00 (UTC/GMT) | Sheet 21 of 43

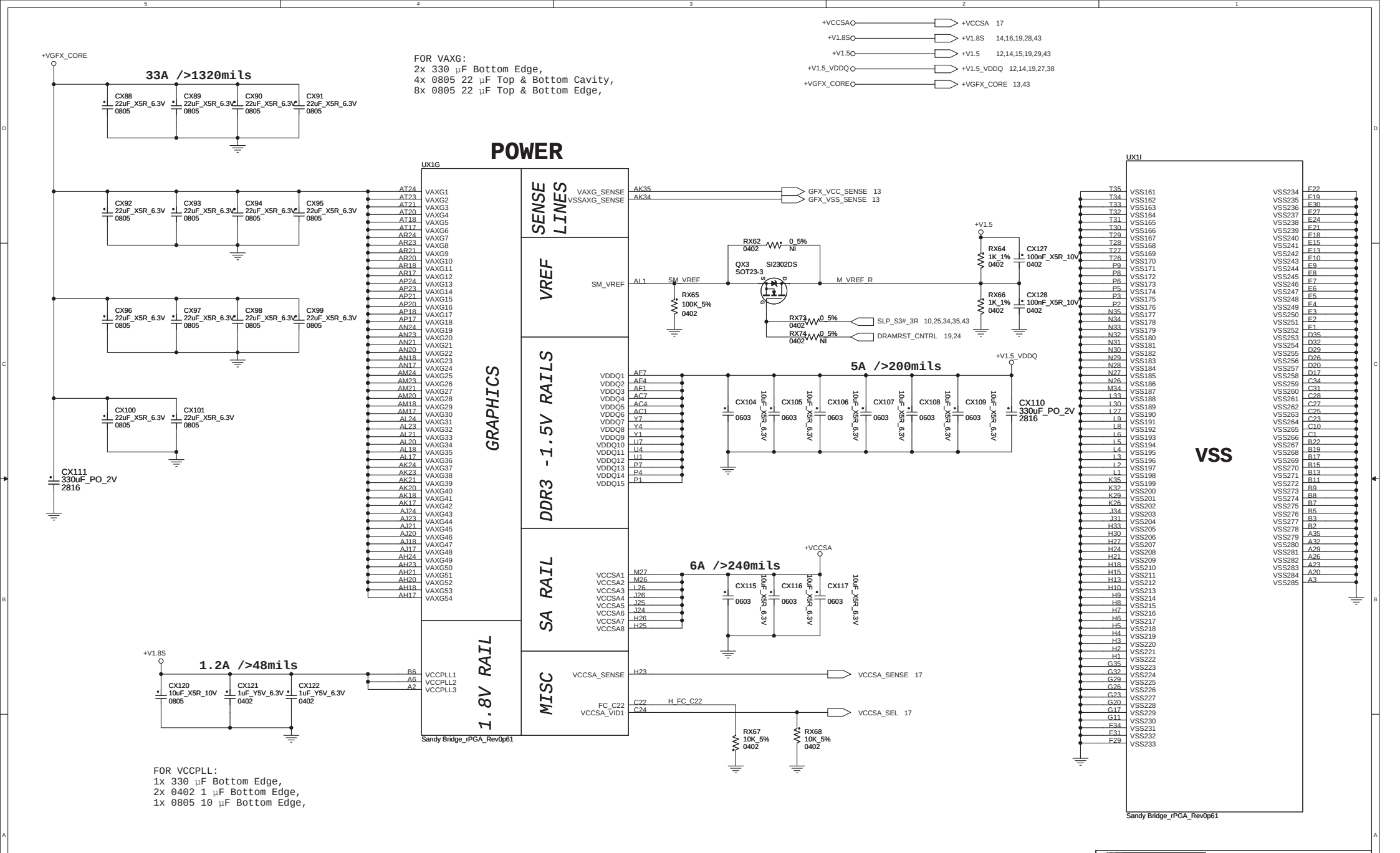
POWER
+VCCSA +VCCSA 17
+V1.8S +V1.8S 14,16,19,28,43
+V1.5 +V1.5 12,14,15,19,29,43
+V1.5_VDDQ +V1.5_VDDQ 12,14,19,27,38
+VGFX_CORE +VGFX_CORE 13,43
+VGFX_CORE
33A />1320mils
CX88 22uF_X5R_6.3V 0805
CX89 22uF_X5R_6.3V 0805
CX90 22uF_X5R_6.3V 0805
CX91 22uF_X5R_6.3V 0805
CX92 22uF_X5R_6.3V 0805
CX93 22uF_X5R_6.3V 0805
CX94 22uF_X5R_6.3V 0805
CX95 22uF_X5R_6.3V 0805
CX96 22uF_X5R_6.3V 0805
CX97 22uF_X5R_6.3V 0805
CX98 22uF_X5R_6.3V 0805
CX99 22uF_X5R_6.3V 0805
CX100 22uF_X5R_6.3V 0805
CX101 22uF_X5R_6.3V 0805
CX111 330uF_PO_2V 2816
FOR VAXG:
2x 330 µF Bottom Edge,
4x 0805 22 µF Top & Bottom Cavity,
8x 0805 22 µF Top & Bottom Edge,
UX1G
GRAPHICS
SENSE LINES
VREF
DDR3 -1.5V RAILS
SA RAIL
MISC
1.8V RAIL
Sandy Bridge_rPGA_Rev0p61
VAXG_SENSE AK35 GFX_VCC_SENSE 13
VSSAXG_SENSE AK34 GFX_VSS_SENSE 13
SM_VREF AL1 SM_VREF
RX65 100K_5% 0402
RX62 0402 0_5% NI
QX3 SOT23-3 SI2302DS
M_VREF_R
RX73 0402 0_5% SLP_S3#_3R 10,25,34,35,43
RX74 0402 0_5% NI DRAMRST_CNTRL 19,24
+V1.5
RX64 1K_1% 0402
RX66 1K_1% 0402
CX127 100nF_X5R_10V 0402
CX128 100nF_X5R_10V 0402
+V1.5_VDDQ
5A />200mils
VDDQ1 AF7
VDDQ2 AF4
VDDQ3 AF1
VDDQ4 AC7
VDDQ5 AC4
VDDQ6 AC1
VDDQ7 Y7
VDDQ8 Y4
VDDQ9 Y1
VDDQ10 U7
VDDQ11 U4
VDDQ12 U1
VDDQ13 P7
VDDQ14 P4
VDDQ15 P1
CX104 0603 10uF_X5R_6.3V
CX105 0603 10uF_X5R_6.3V
CX106 0603 10uF_X5R_6.3V
CX107 0603 10uF_X5R_6.3V
CX108 0603 10uF_X5R_6.3V
CX109 0603 10uF_X5R_6.3V
CX110 330uF_PO_2V 2816
+VCCSA
6A />240mils
VCCSA1 M27
VCCSA2 M26
VCCSA3 L26
VCCSA4 J26
VCCSA5 J25
VCCSA6 J24
VCCSA7 H26
VCCSA8 H25
CX115 0603 10uF_X5R_6.3V
CX116 0603 10uF_X5R_6.3V
CX117 0603 10uF_X5R_6.3V
+V1.8S
1.2A />48mils
CX120 10uF_X5R_10V 0805
CX121 1uF_Y5V_6.3V 0402
CX122 1uF_Y5V_6.3V 0402
VCCPLL1 B6
VCCPLL2 A6
VCCPLL3 A2
VCCSA_SENSE H23 VCCSA_SENSE 17
FC_C22 C22 H_FC_C22
VCCSA_VID1 C24 VCCSA_SEL 17
RX67 10K_5% 0402
RX68 10K_5% 0402
FOR VCCPLL:
1x 330 µF Bottom Edge,
2x 0402 1 µF Bottom Edge,
1x 0805 10 µF Bottom Edge,
UX1I
VSS
Sandy Bridge_rPGA_Rev0p61
Hon Hai Precision Industry Co. Ltd.
Foxconn eMS Inc.
HNBD R&D
phone: +886-2-2799-6111
Title
PROCESSOR(5 of 5)
Size Custom
Document Number CHICAGO
Rev MV
Page Modified: Tuesday, March 08, 2011 08:29:00 (UTC/GMT)
Sheet 22 of 43

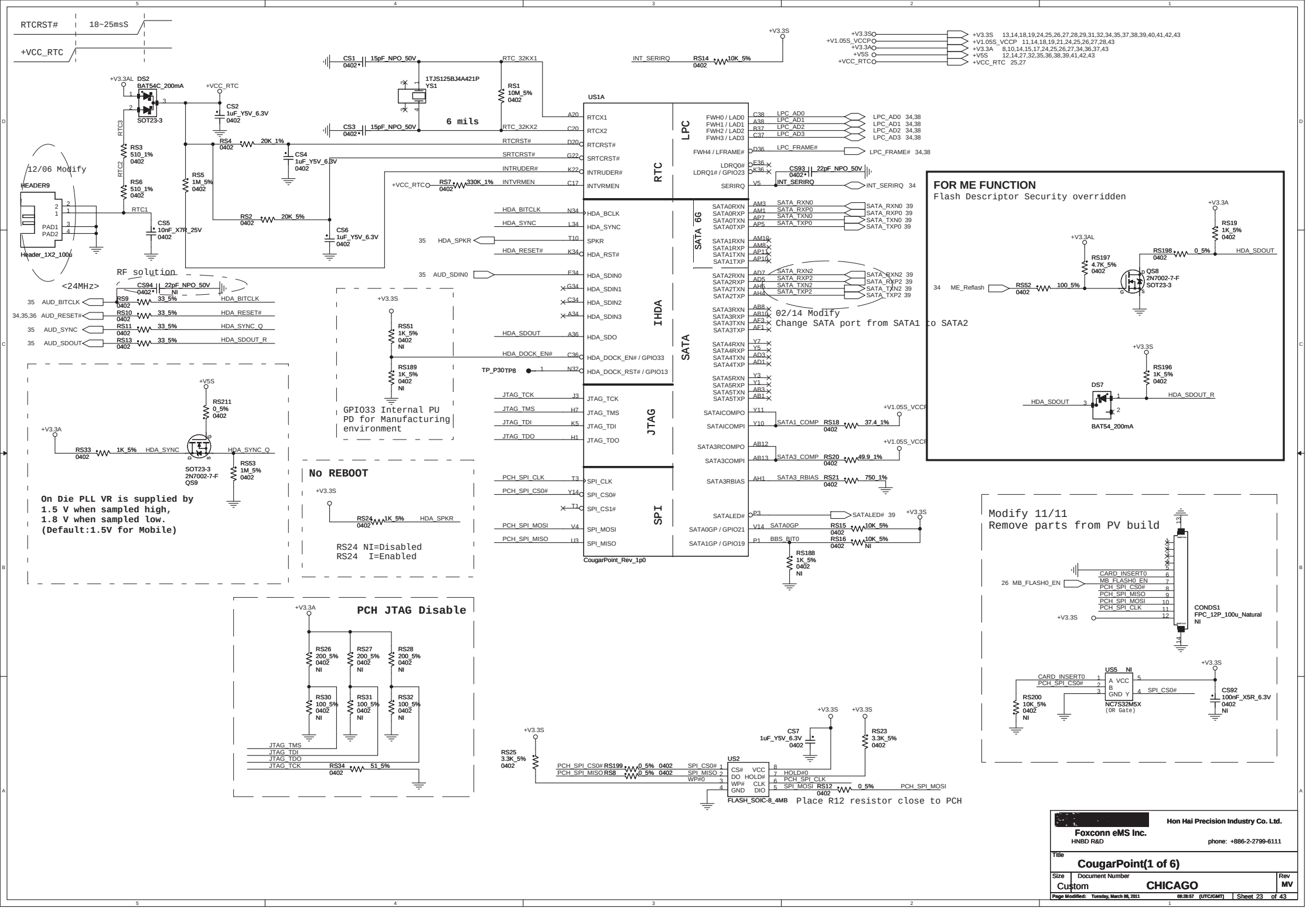
RTCRST# 18~25msS
+VCC_RTC
CS1 0402 15pF_NPO_50V
CS3 0402 15pF_NPO_50V
1TJS125BJ4A421P YS1
6 mils
RTC_32KX1
RTC_32KX2
RS1 10M_5% 0402
INT_SERIRQ RS14 0402 10K_5%
+V3.3S
+V3.3S 13,14,18,19,24,25,26,27,28,29,31,32,34,35,37,38,39,40,41,42,43
+V1.05S_VCCP 11,14,18,19,21,24,25,26,27,28,43
+V3.3A 8,10,14,15,17,24,25,26,27,34,36,37,43
+V5S 12,14,27,32,35,36,38,39,41,42,43
+VCC_RTC 25,27
+V3.3AL DS2 BAT54C_200mA
SOT23-3
+VCC_RTC
CS2 1uF_Y5V_6.3V 0402
RS4 0402 20K_1%
CS4 1uF_Y5V_6.3V 0402
RS3 510_1% 0402
RS6 510_1% 0402
RS5 1M_5% 0402
RS2 0402 20K_5%
CS5 10nF_X7R_25V 0402
CS6 1uF_Y5V_6.3V 0402
12/06 Modify
HEADER9
Header_1X2_100u
RTC1
RTC2
RTC3
+VCC_RTC RS7 0402 330K_1%
US1A
RTCX1
RTCX2
RTCRST#
SRTCRST#
INTRUDER#
INTVRMEN
HDA_BCLK
HDA_SYNC
SPKR
HDA_RST#
HDA_SDIN0
HDA_SDIN1
HDA_SDIN2
HDA_SDIN3
HDA_SDOUT
HDA_DOCK_EN# / GPIO33
HDA_DOCK_RST# / GPIO13
JTAG_TCK
JTAG_TMS
JTAG_TDI
JTAG_TDO
SPI_CLK
SPI_CS0#
SPI_CS1#
SPI_MOSI
SPI_MISO
CougarPoint_Rev_1p0
LPC
RTC
IHDA
JTAG
SPI
SATA 6G
SATA
FWH0 / LAD0
FWH1 / LAD1
FWH2 / LAD2
FWH3 / LAD3
FWH4 / LFRAME#
LDRQ0#
LDRQ1# / GPIO23
SERIRQ
LPC_AD0 34,38
LPC_AD1 34,38
LPC_AD2 34,38
LPC_AD3 34,38
LPC_FRAME# 34,38
CS93 0402 22pF_NPO_50V
INT_SERIRQ 34
SATA_RXN0 39
SATA_RXP0 39
SATA_TXN0 39
SATA_TXP0 39
SATA_RXN2 39
SATA_RXP2 39
SATA_TXN2 39
SATA_TXP2 39
02/14 Modify
Change SATA port from SATA1 to SATA2
SATAICOMPO
SATAICOMPI
SATA1_COMP RS18 0402 37.4_1%
+V1.05S_VCCP
SATA3RCOMPO
SATA3COMPI
SATA3_COMP RS20 0402 49.9_1%
SATA3RBIAS
SATA3_RBIAS RS21 0402 750_1%
SATALED#
SATALED# 39
SATA0GP / GPIO21
SATA0GP RS15 0402 10K_5%
SATA1GP / GPIO19
BBS_BIT0 RS16 0402 10K_5% NI
RS188 1K_5% 0402 NI
+V3.3S
FOR ME FUNCTION
Flash Descriptor Security overridden
+V3.3A
RS19 1K_5% 0402
+V3.3AL
RS197 4.7K_5% 0402
RS198 0402 0_5%
HDA_SDOUT
QS8 2N7002-7-F SOT23-3
34 ME_Reflash
RS52 0402 100_5%
+V3.3S
RS196 1K_5% 0402
DS7
HDA_SDOUT
HDA_SDOUT_R
BAT54_200mA
35 AUD_BITCLK
RS9 0402 33_5%
HDA_BITCLK
34,35,36 AUD_RESET#
RS10 0402 33_5%
HDA_RESET#
35 AUD_SYNC
RS11 0402 33_5%
HDA_SYNC_Q
35 AUD_SDOUT
RS13 0402 33_5%
HDA_SDOUT_R
35 HDA_SPKR
35 AUD_SDIN0
<24MHz>
CS94 0402 22pF_NPO_50V NI
RF solution
+V3.3S
RS51 1K_5% 0402 NI
RS189 1K_5% 0402 NI
TP_P30TP8
GPIO33 Internal PU
PD for Manufacturing
environment
+V5S
RS211 0_5% 0402
+V3.3A
RS33 0402 1K_5%
HDA_SYNC
HDA_SYNC_Q
SOT23-3 2N7002-7-F QS9
RS53 1M_5% 0402
On Die PLL VR is supplied by
1.5 V when sampled high,
1.8 V when sampled low.
(Default:1.5V for Mobile)
No REBOOT
+V3.3S
RS24 0402 1K_5%
HDA_SPKR
RS24 NI=Disabled
RS24 I=Enabled
PCH_SPI_CLK
PCH_SPI_CS0#
PCH_SPI_MOSI
PCH_SPI_MISO
Modify 11/11
Remove parts from PV build
26 MB_FLASH0_EN
CARD_INSERT0
MB_FLASH0_EN
PCH_SPI_CS0#
PCH_SPI_MISO
PCH_SPI_MOSI
PCH_SPI_CLK
CONDS1 FPC_12P_100u_Natural NI
+V3.3S
US5 NI
A VCC
B
GND Y
NC7S32M5X (OR Gate)
CARD_INSERT0
PCH_SPI_CS0#
SPI_CS0#
RS200 10K_5% 0402 NI
CS92 100nF_X5R_6.3V 0402 NI
PCH JTAG Disable
+V3.3A
RS26 200_5% 0402 NI
RS27 200_5% 0402 NI
RS28 200_5% 0402 NI
RS30 100_5% 0402 NI
RS31 100_5% 0402 NI
RS32 100_5% 0402 NI
JTAG_TMS
JTAG_TDI
JTAG_TDO
JTAG_TCK
RS34 0402 51_5%
+V3.3S
RS25 3.3K_5% 0402
PCH_SPI_CS0# RS199 0_5% 0402
PCH_SPI_MISO RS8 0_5% 0402
US2
CS# VCC
DO HOLD#
WP# CLK
GND DIO
SPI_CS0#
SPI_MISO
WP#0
HOLD#0
PCH_SPI_CLK
SPI_MOSI RS12 0402 0_5%
PCH_SPI_MOSI
FLASH_SOIC-8_4MB
CS7 1uF_Y5V_6.3V 0402
RS23 3.3K_5% 0402
Place R12 resistor close to PCH
Hon Hai Precision Industry Co. Ltd.
Foxconn eMS Inc.
HNBD R&D
phone: +886-2-2799-6111
Title
CougarPoint(1 of 6)
Size Custom
Document Number CHICAGO
Rev MV
Page Modified: Tuesday, March 08, 2011 08:28:57 (UTC/GMT)
Sheet 23 of 43

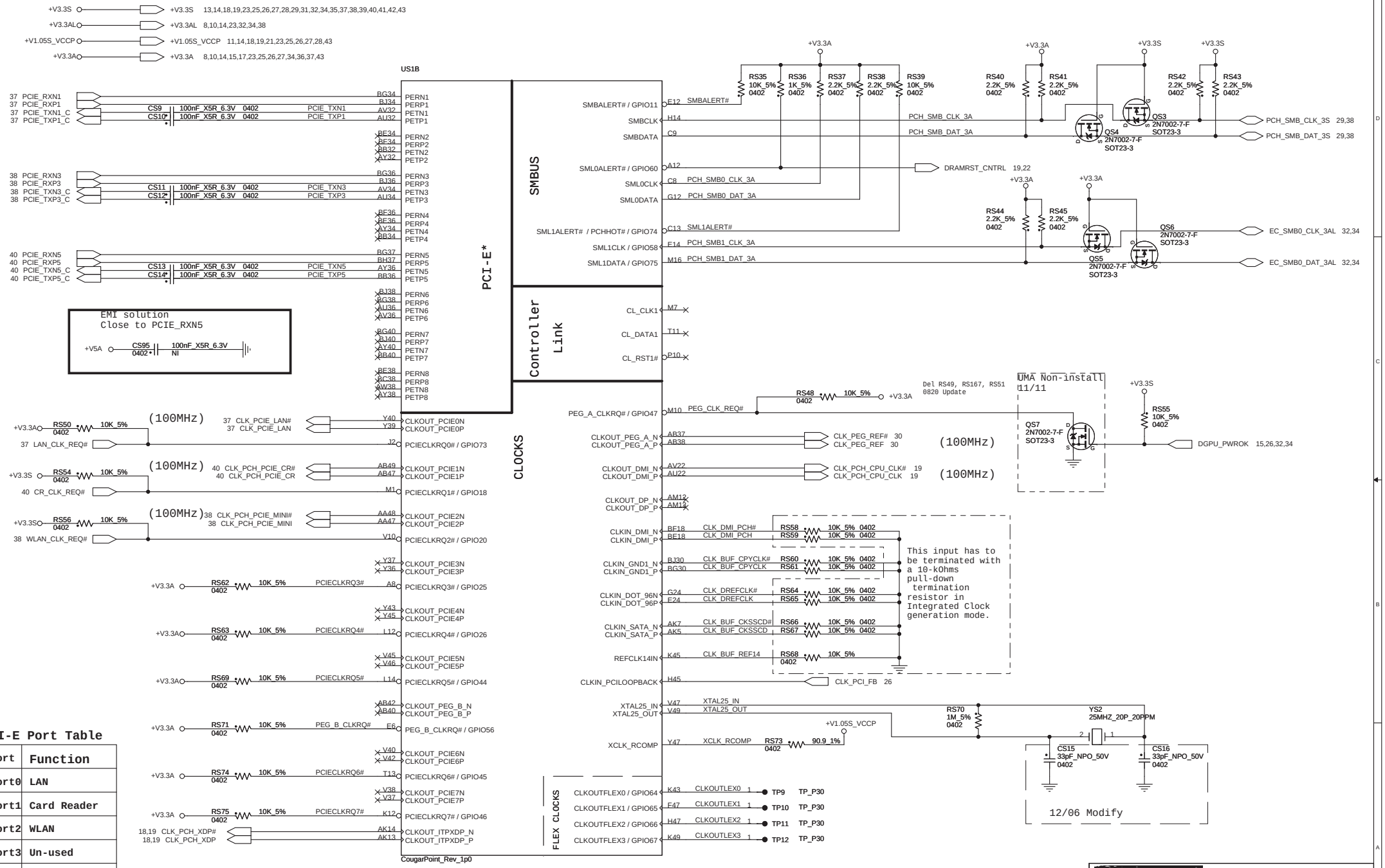

PCI-E Port Table

Port	Function
Port0	LAN
Port1	Card Reader
Port2	WLAN
Port3	Un-used
Port4	Un-used
Port5	Un-used
Port6	Un-used
Port7	Un-used

Hon Hai Precision Industry Co. Ltd.
Foxconn eMS Inc.
HNBD R&D
phone: +886-2-2799-6111

Title: CougarPoint(2 of 6)

Size: Custom | Document Number: CHICAGO | Rev: MV

Page Modified: Tuesday, March 08, 2011 08:28:59 (UTC/GMT) | Sheet 24 of 43

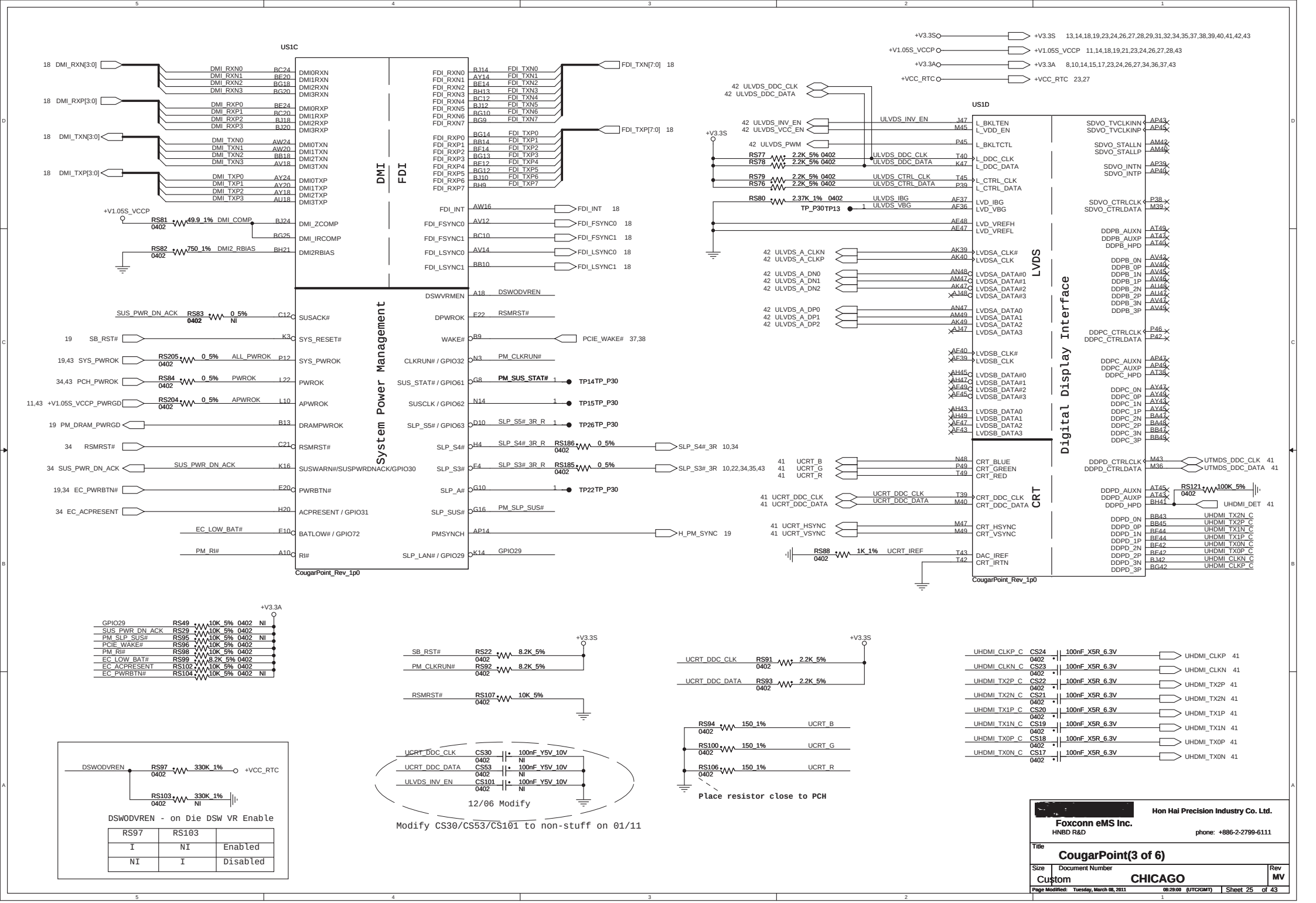
US1C
DMI
FDI
System Power Management
CougarPoint_Rev_1p0
US1D
LVDS
Digital Display Interface
CRT
CougarPoint_Rev_1p0
+V3.3S 13,14,18,19,23,24,26,27,28,29,31,32,34,35,37,38,39,40,41,42,43
+V1.05S_VCCP 11,14,18,19,21,23,24,26,27,28,43
+V3.3A 8,10,14,15,17,23,24,26,27,34,36,37,43
+VCC_RTC 23,27
DSWODVREN - on Die DSW VR Enable
Place resistor close to PCH
12/06 Modify
Modify CS30/CS53/CS101 to non-stuff on 01/11
Hon Hai Precision Industry Co. Ltd.
Foxconn eMS Inc.
HNBD R&D
phone: +886-2-2799-6111
Title
CougarPoint(3 of 6)
Size
Custom
Document Number
CHICAGO
Rev
MV
Page Modified: Tuesday, March 08, 2011 08:29:00 (UTC/GMT)
Sheet 25 of 43

Boot BIOS Strap		
BBS_BIT1	BBS_BIT0	Boot BIOS Location
0	0	LPC
0	1	Reserved (NAND)
1	0	PCI
1	1	SPI

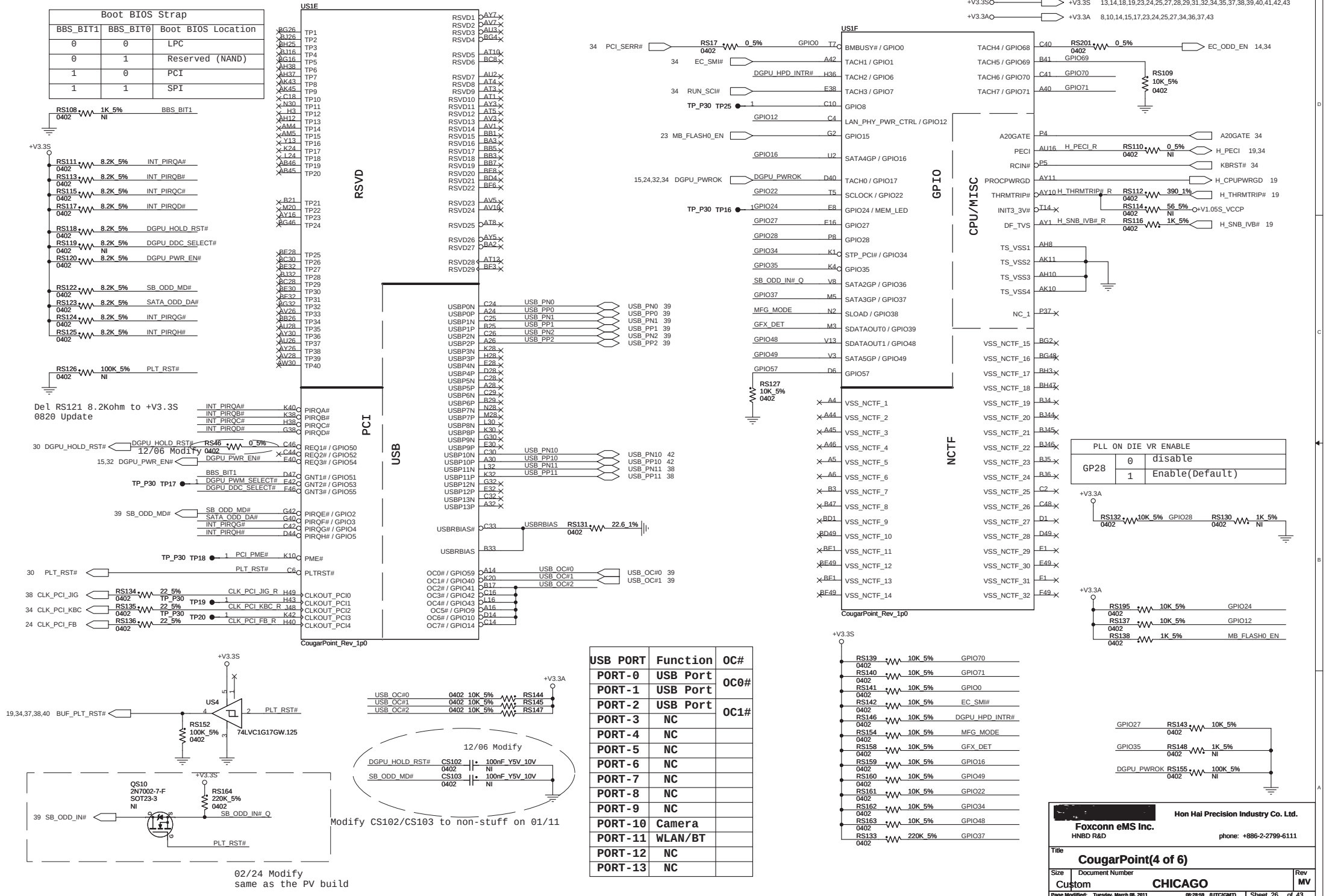

PLL ON DIE VR ENABLE		
GP28	0	disable
	1	Enable(Default)

USB PORT	Function	OC#
PORT-0	USB Port	OC0#
PORT-1	USB Port	
PORT-2	USB Port	OC1#
PORT-3	NC	
PORT-4	NC	
PORT-5	NC	
PORT-6	NC	
PORT-7	NC	
PORT-8	NC	
PORT-9	NC	
PORT-10	Camera	
PORT-11	WLAN/BT	
PORT-12	NC	
PORT-13	NC	

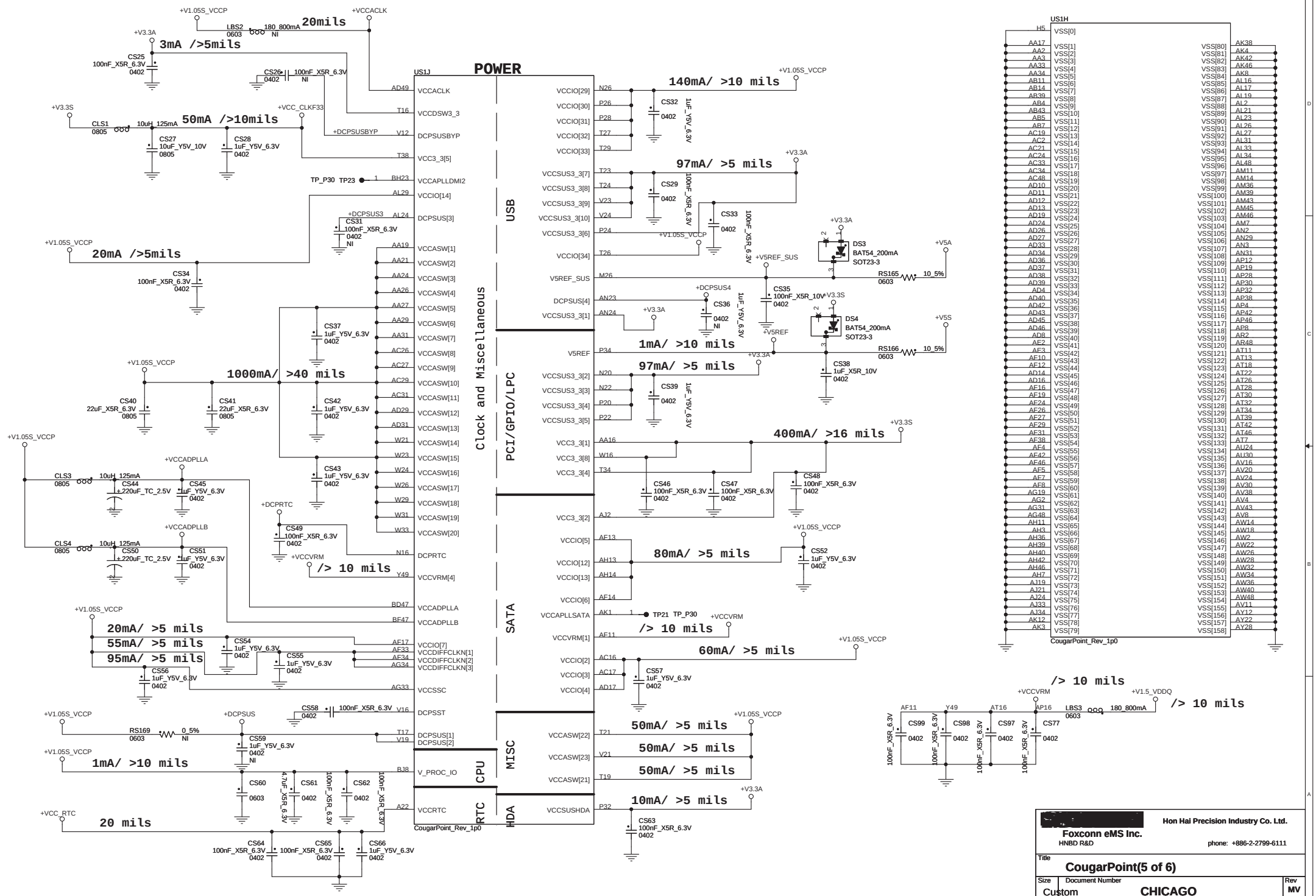
POWER
US1J
Clock and Miscellaneous
USB
PCI/GPIO/LPC
SATA
MISC
CPU
RTC
HDA
CougarPoint_Rev_1p0
US1H
+V1.05S_VCCP
+VCCACLK
+V3.3A
+V3.3S
+VCC_CLKF33
+DCPSUSBYP
+DCPSUS3
+DCPSUS4
+V5REF_SUS
+V5REF
+V5A
+V5S
+VCCADPLLA
+VCCADPLLB
+DCPRTC
+VCCVRM
+DCPSUS
+V1.5_VDDQ
+VCC_RTC
20mils
3mA />5mils
50mA />10mils
20mA />5mils
1000mA/ >40 mils
/> 10 mils
20mA/ >5 mils
55mA/ >5 mils
95mA/ >5 mils
1mA/ >10 mils
20 mils
140mA/ >10 mils
97mA/ >5 mils
1mA/ >10 mils
97mA/ >5 mils
400mA/ >16 mils
80mA/ >5 mils
/> 10 mils
60mA/ >5 mils
50mA/ >5 mils
50mA/ >5 mils
50mA/ >5 mils
10mA/ >5 mils
/> 10 mils
/> 10 mils
Hon Hai Precision Industry Co. Ltd.
Foxconn eMS Inc.
HNBD R&D
phone: +886-2-2799-6111
Title
CougarPoint(5 of 6)
Size
Custom
Document Number
CHICAGO
Rev
MV
Page Modified: Tuesday, March 08, 2011 08:28:58 (UTC/GMT)
Sheet 27 of 43

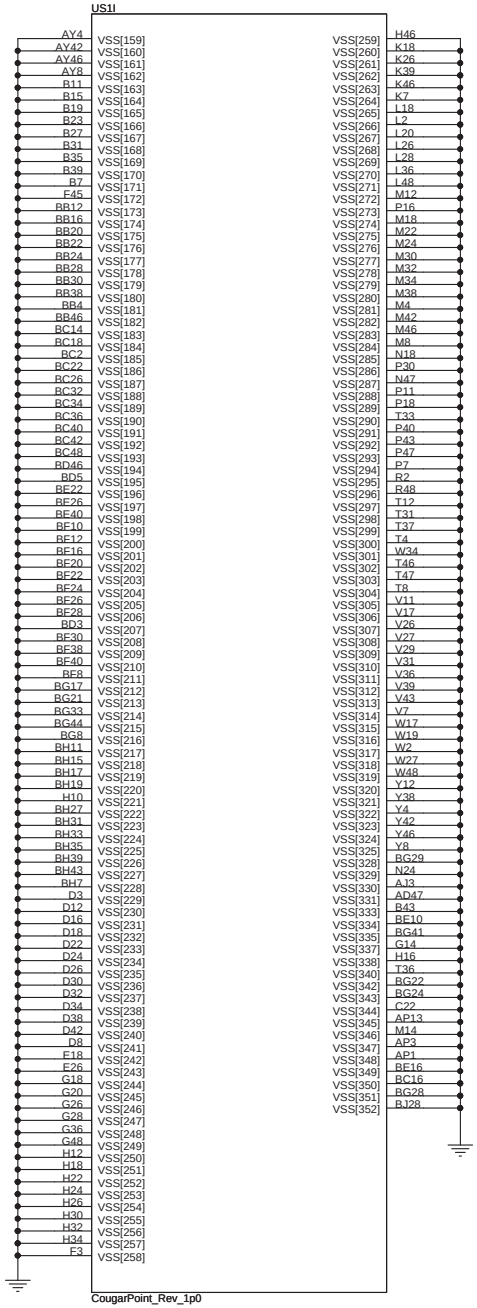

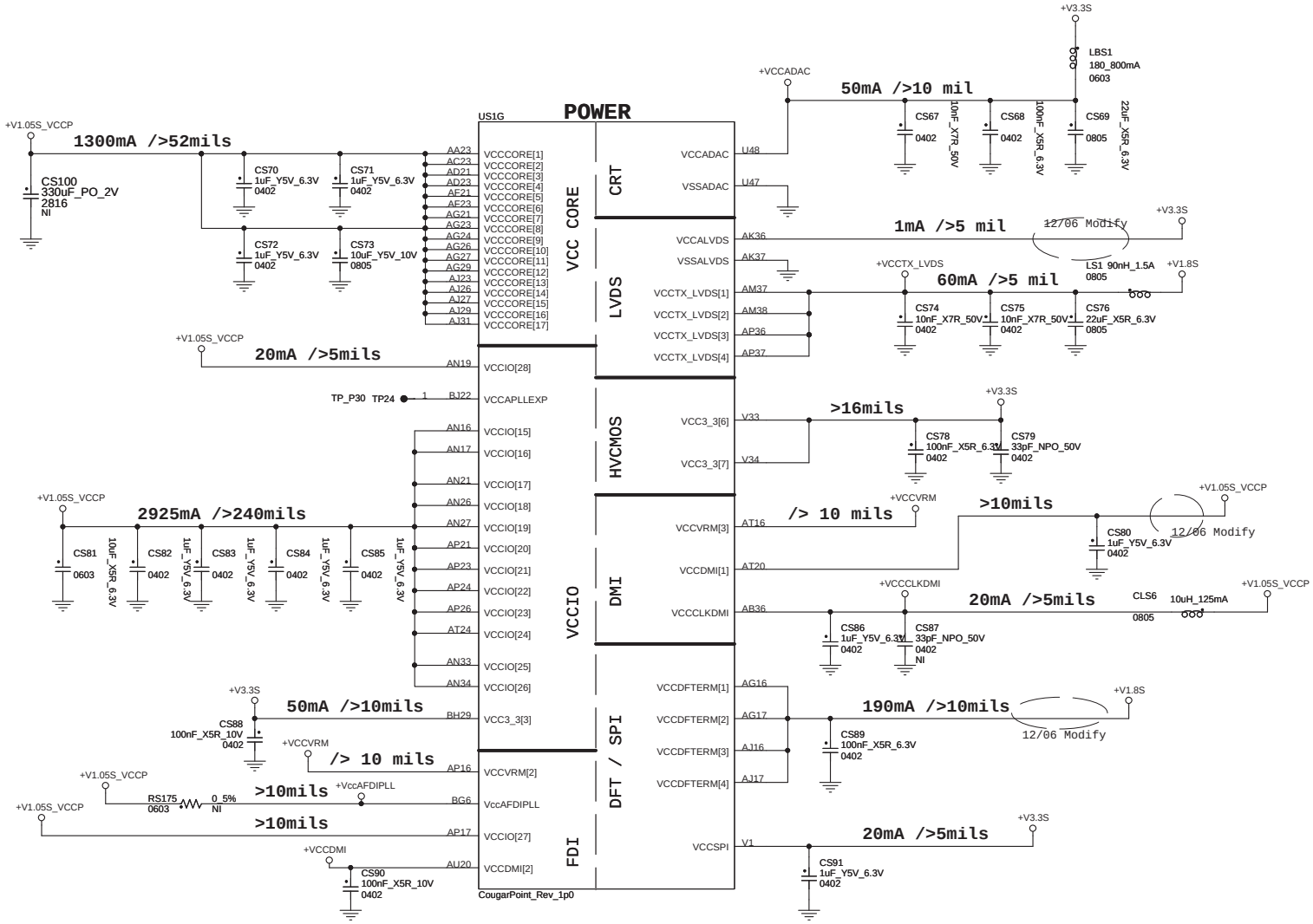

[redacted]

Foxconn eMS Inc.
HNBD R&D

Hon Hai Precision Industry Co. Ltd.
phone: +886-2-2799-6111

Title: **CougarPoint(6 of 6)**

Size	Document Number	Rev
Custom	CHICAGO	MV

Page Modified: Tuesday, March 08, 2011 08:28:59 (UTC/GMT) Sheet 28 of 43

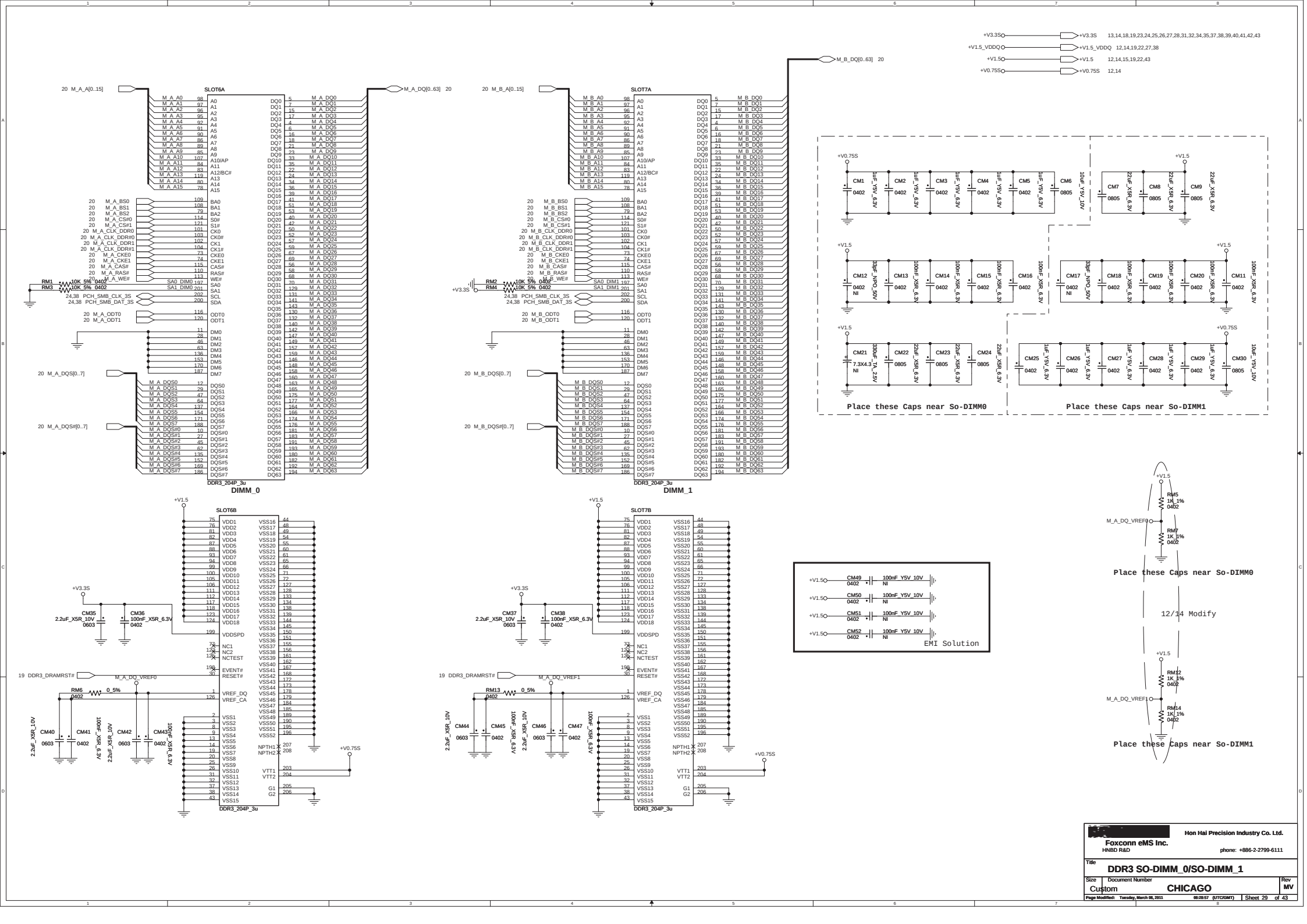
SLOT6A
DDR3_204P_3u
DIMM_0
SLOT7A
DIMM_1
SLOT6B
SLOT7B
M_A_DQ[0..63] 20
M_B_DQ[0..63] 20
+V3.3S 13,14,18,19,23,24,25,26,27,28,31,32,34,35,37,38,39,40,41,42,43
+V1.5_VDDQ 12,14,19,22,27,38
+V1.5 12,14,15,19,22,43
+V0.75S 12,14
Place these Caps near So-DIMM0
Place these Caps near So-DIMM1
EMI Solution
M_A_DQ_VREF0
M_A_DQ_VREF1
12/14 Modify
Hon Hai Precision Industry Co. Ltd.
Foxconn eMS Inc.
HNBD R&D
phone: +886-2-2799-6111
Title
DDR3 SO-DIMM_0/SO-DIMM_1
Size
Custom
Document Number
CHICAGO
Rev
MV
Page Modified: Tuesday, March 08, 2011 08:28:57 (UTC/GMT)
Sheet 29 of 43

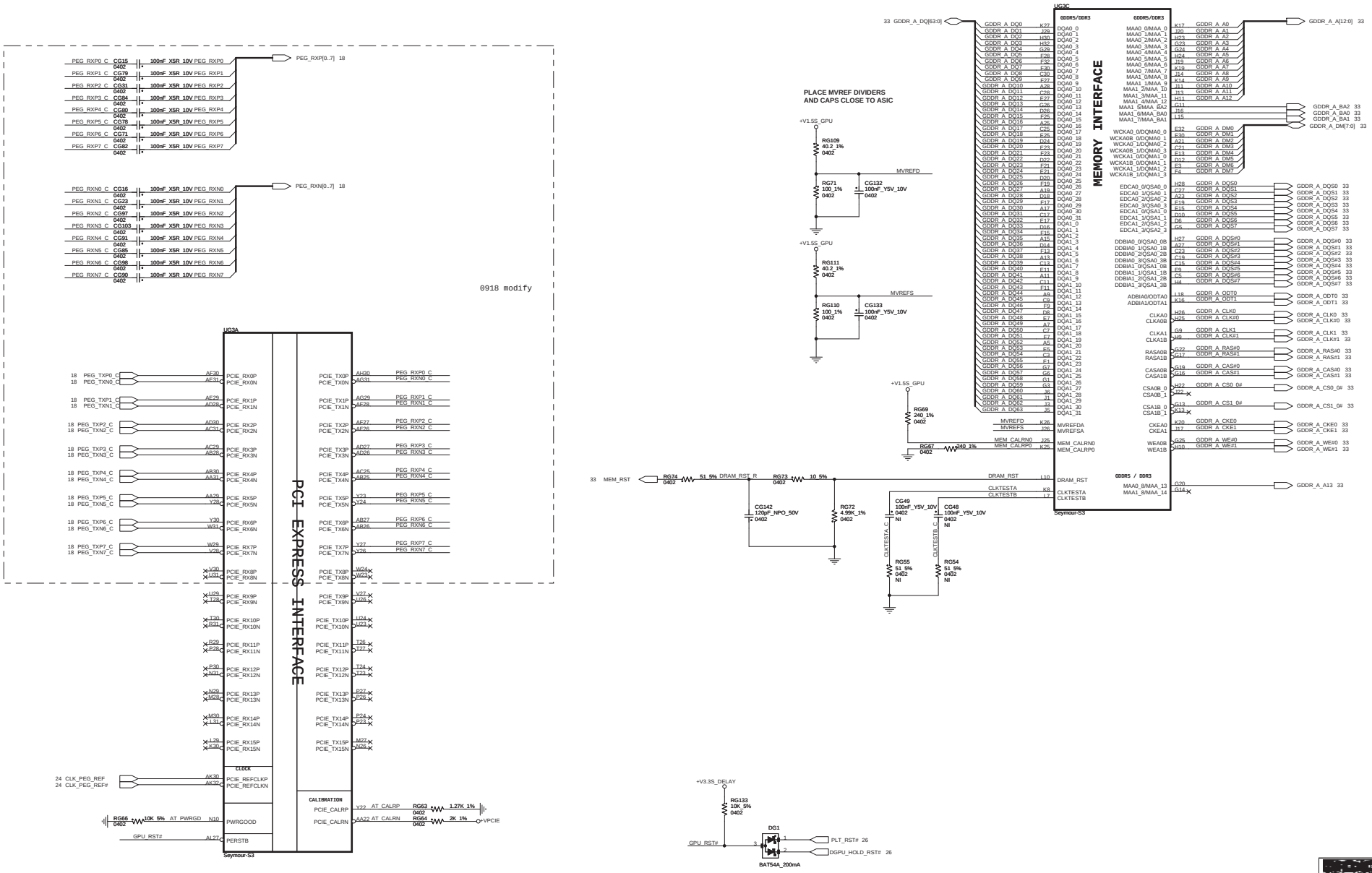
PEG_RXP[0..7] 18
PEG_RXN[0..7] 18
0918 modify
UG3A
PCI EXPRESS INTERFACE
CLOCK
CALIBRATION
Seymour-S3
UG3C
MEMORY INTERFACE
GDDR5/DDR3
GDDR5 / DDR3
PLACE MVREF DIVIDERS
AND CAPS CLOSE TO ASIC
33 GDDR_A_DQ[63:0]
GDDR_A_A[12:0] 33
GDDR_A_DM[7:0] 33
33 MEM_RST
+V3.3S_DELAY
DG1
BAT54A_200mA
PLT_RST# 26
DGPU_HOLD_RST# 26
Foxconn eMS Inc.
HNBD R&D
Hon Hai Precision Industry Co. Ltd.
phone: +886-2-2799-6111
Title
VGA_S3 (PCI-E) 1/3
Size
Document Number
Rev
Custom
CHICAGO
MV
Page Modified: Tuesday, March 09, 2021
Sheet 30 of 43

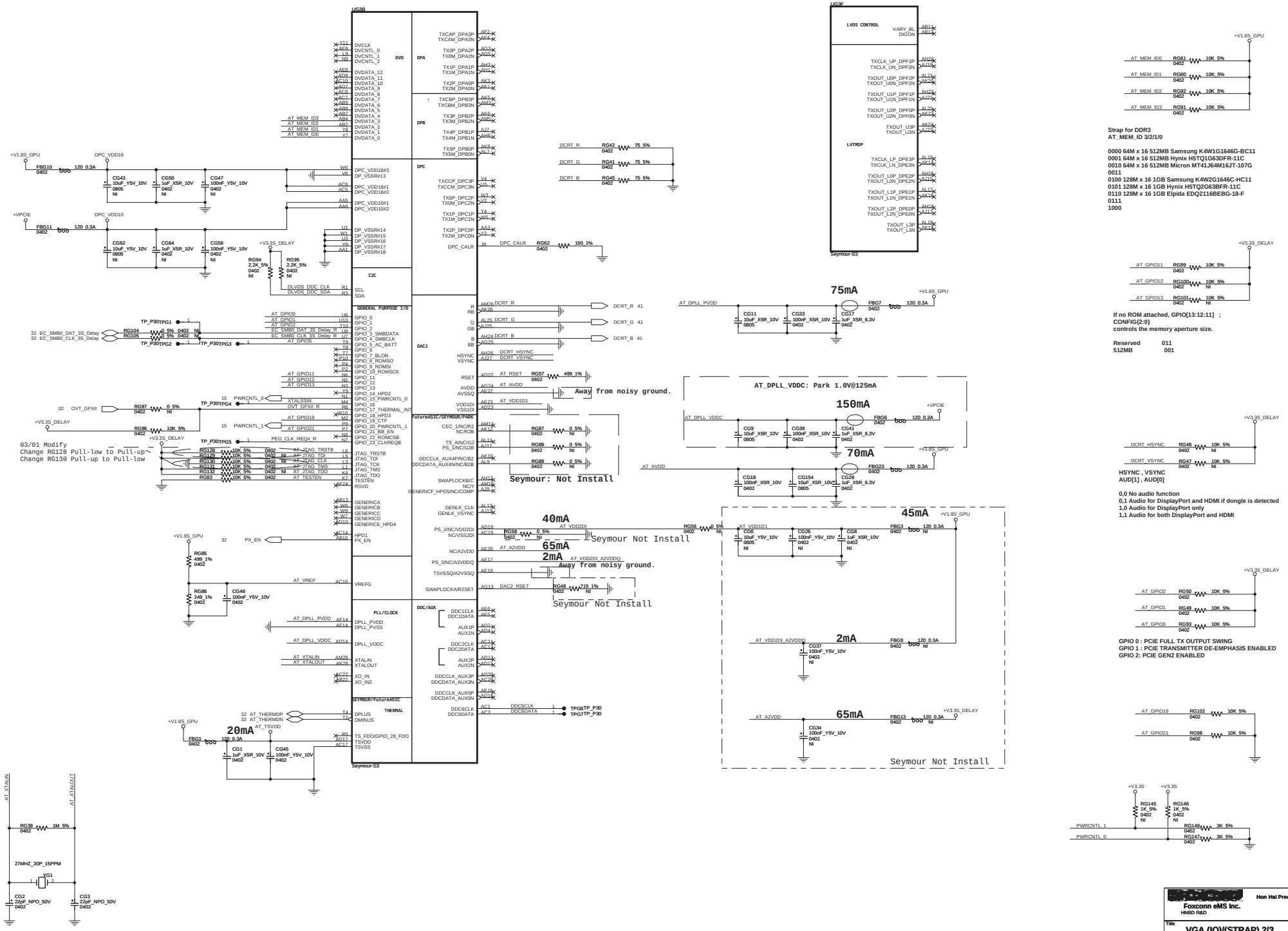

Foxconn eMS Inc.
HNBD R&D

Hon Hai Precision Industry Co. Ltd.
phone: +886-2-2799-6111

Title: VGA (IO)/(STRAP) 2/3

Size: Custom | Document Number: CHICAGO | Rev: MV

Page Modified: Tuesday, March 09, 2021 09:29:00 (UTC/GMT) | Sheet 31 of 43

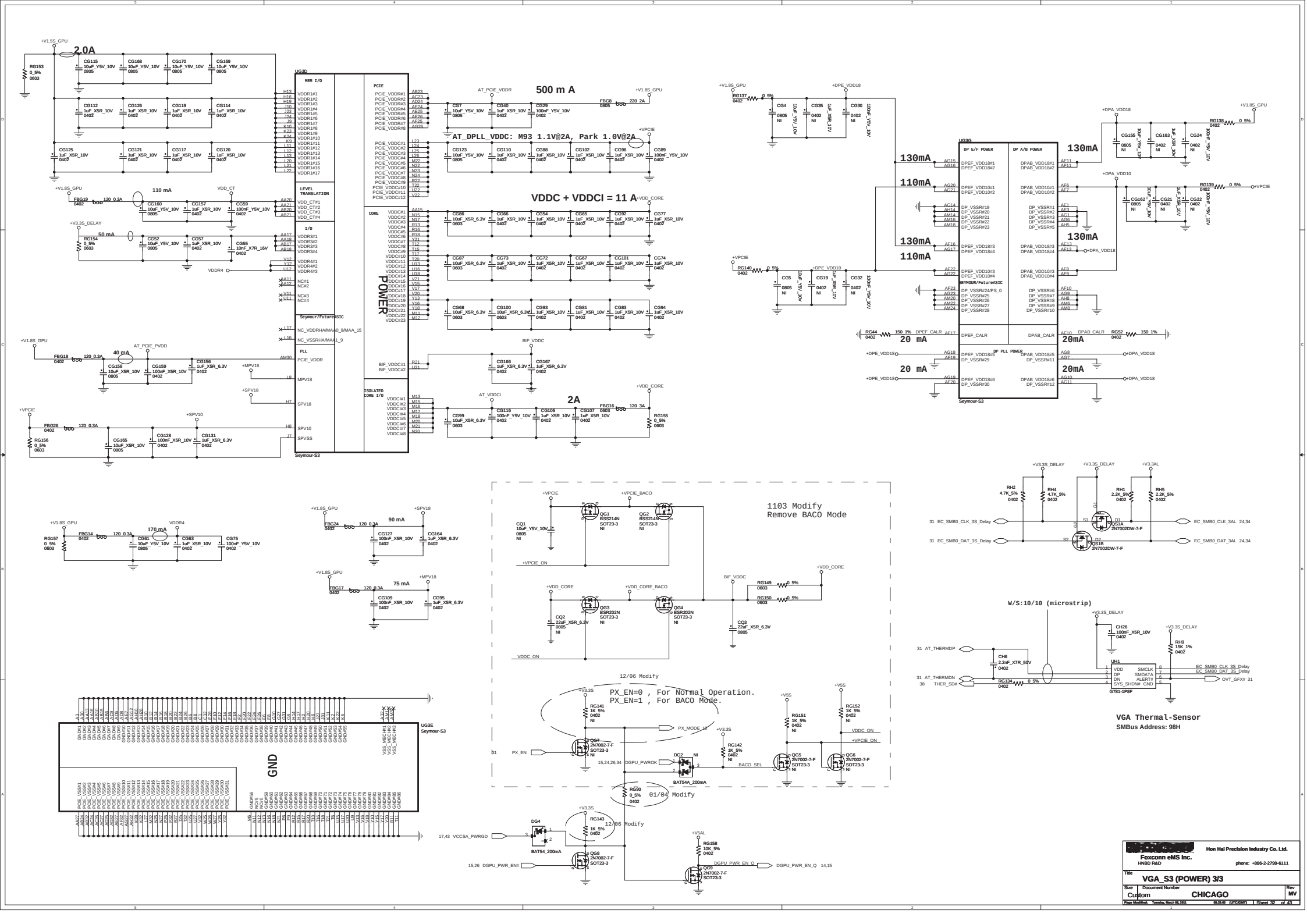
2.0A
500 m A
AT_DPLL_VDDC: M93 1.1V@2A, Park 1.0V@2A
VDDC + VDDCI = 11 A
2A
110 mA
50 mA
40 mA
170 mA
90 mA
75 mA
130mA
110mA
20 mA
UG3D
Seymour-S3
POWER
GND
UG3G
DP E/F POWER
DP A/B POWER
DP PLL POWER
1103 Modify
Remove BACO Mode
PX_EN=0 , For Normal Operation.
PX_EN=1 , For BACO Mode.
12/06 Modify
01/04 Modify
W/S:10/10 (microstrip)
VGA Thermal-Sensor
SMBus Address: 98H
Foxconn eMS Inc.
HNBD R&D
Hon Hai Precision Industry Co. Ltd.
phone: +886-2-2799-6111
Title
VGA_S3 (POWER) 3/3
Size
Document Number
Rev
Custom
CHICAGO
MV
Page Modified: Tuesday, March 09, 2021
Sheet 32 of 43

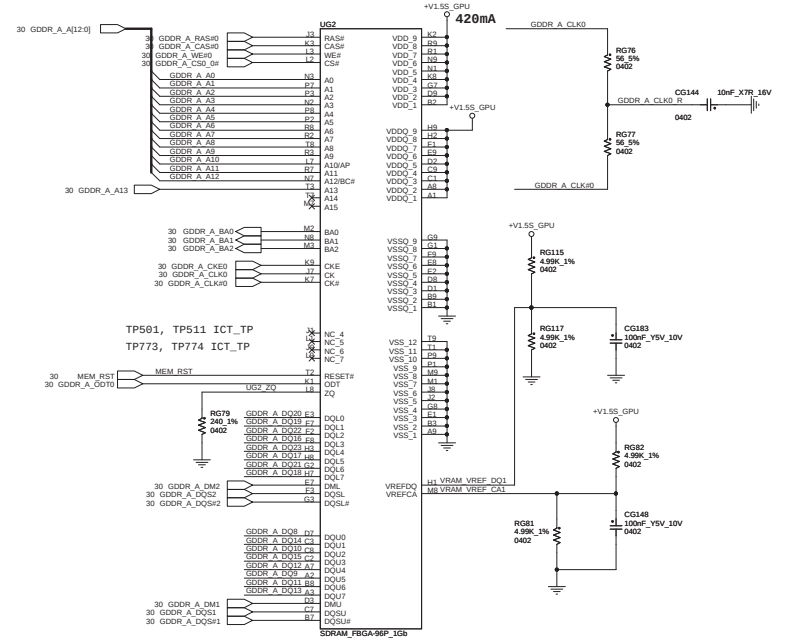

Place around the VRAM UG2 FBGA-96 1.2A

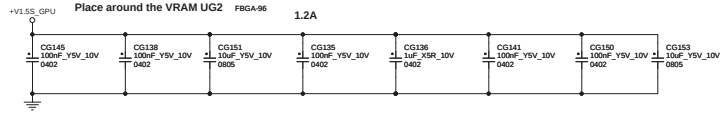

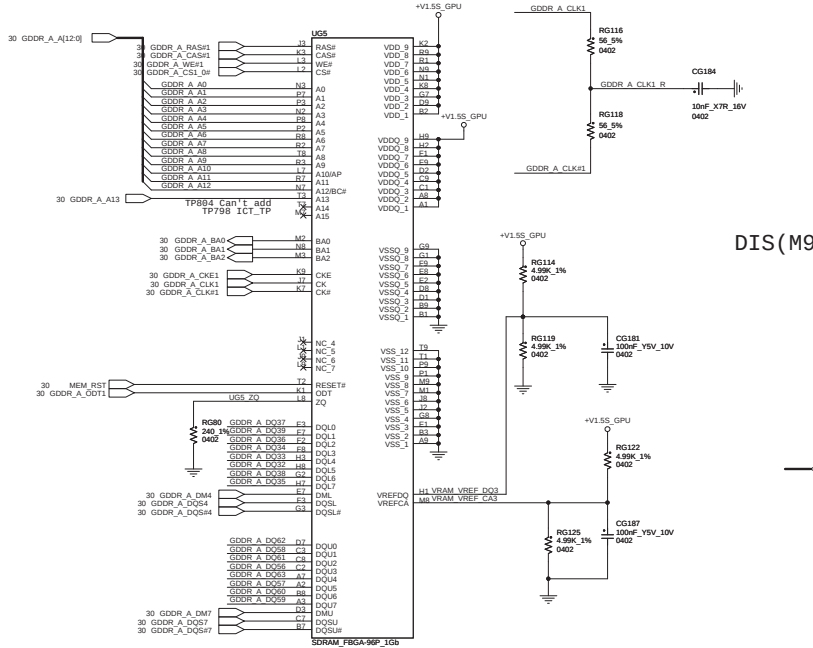

Place around the VRAM UG5 FBGA-96 1.2A

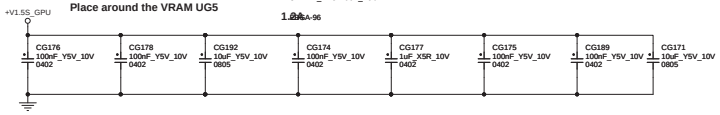

DIS(M93 XT);PX : Install

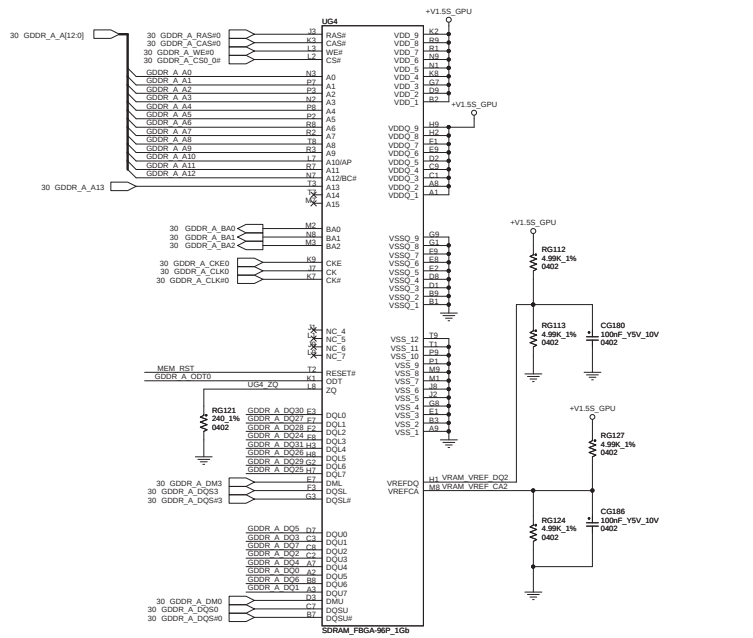

Place around the VRAM UG4 FBGA-96 1.2A

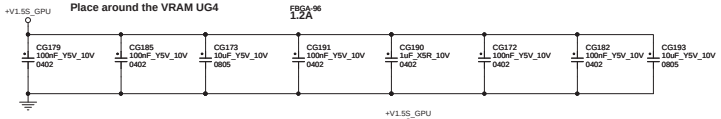

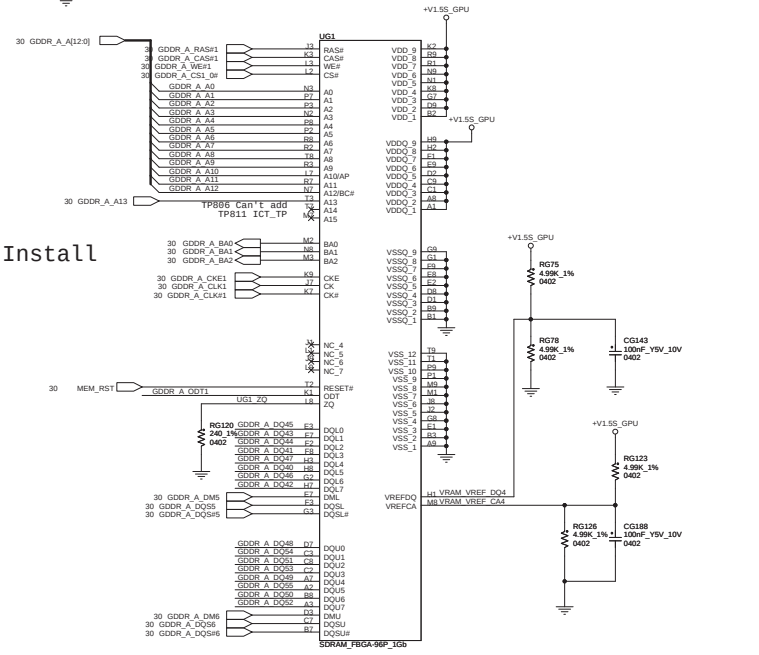

Place around the VRAM UG1 FBGA-96 1.2A

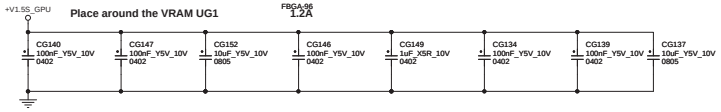

Foxconn eMS Inc.
HNBD R&D
Hon Hai Precision Industry Co. Ltd.
phone: +886-2-2799-6111

Title: VRAM (DDR3)

Size	Document Number	Rev
Custom	CHICAGO	MV

Page Modified: Tuesday, March 09, 2021 09:29:00 (UTC/GMT) Sheet 33 of 43

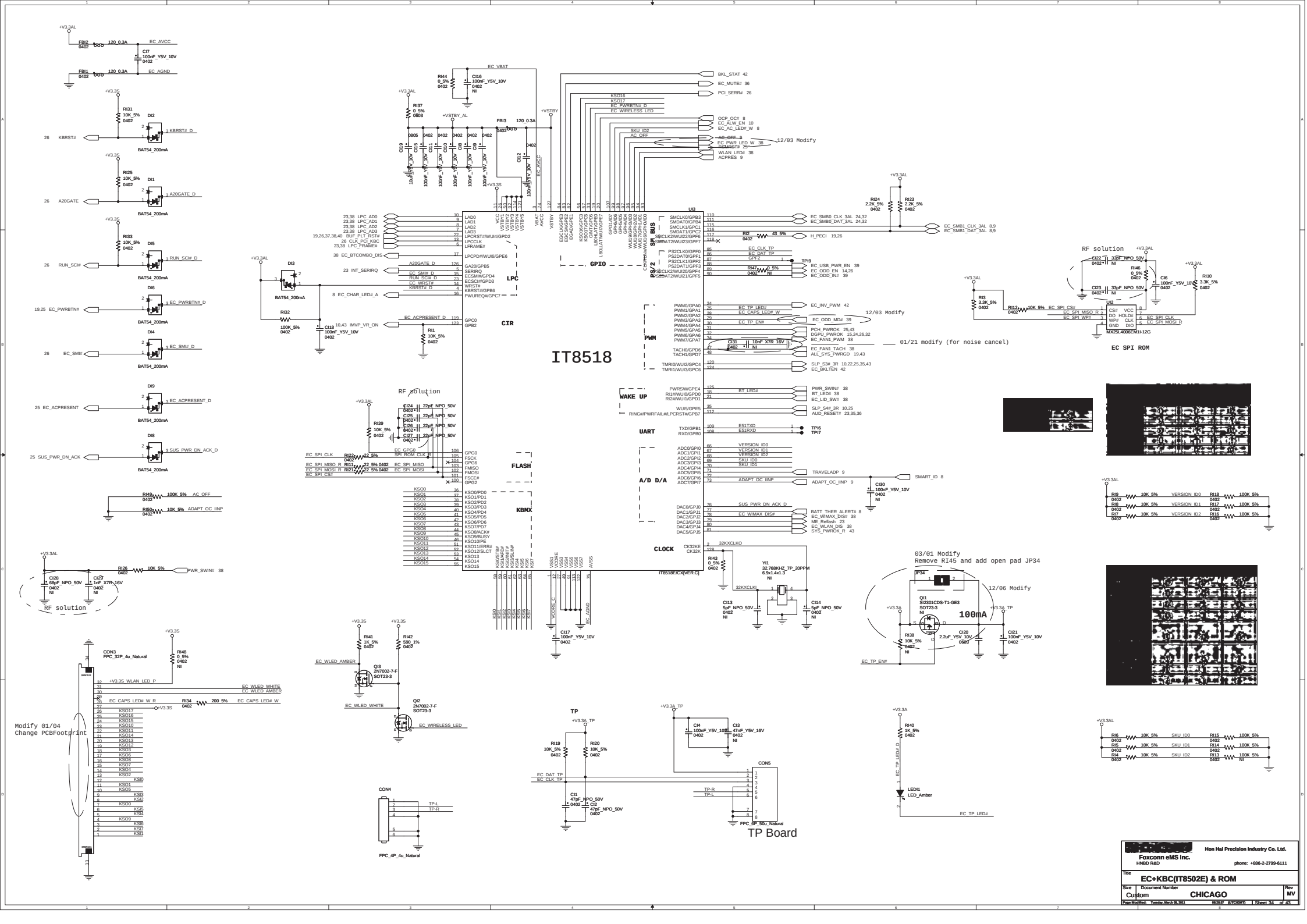

Foxconn eMS Inc.
HNBD R&D

Hon Hai Precision Industry Co. Ltd.
phone: +886-2-2799-6111

Title: EC+KBC(IT8502E) & ROM

Size: Custom | Document Number: CHICAGO | Rev: MV

Page Modified: Tuesday, March 08, 2011 08:28:07 (UTC/GMT) | Sheet 34 of 43

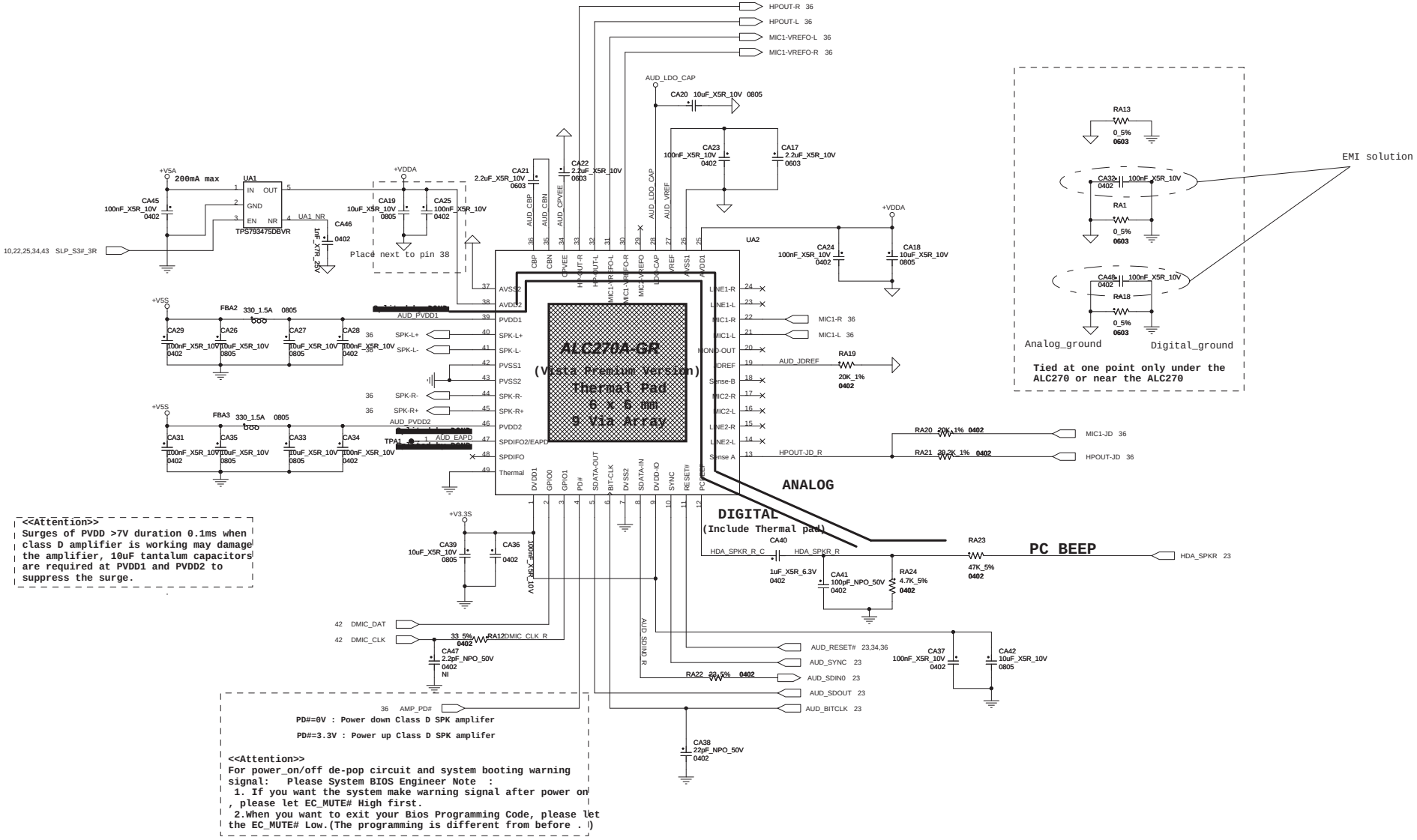

Foxconn eMS Inc. HNBD R&D	Hon Hai Precision Industry Co. Ltd. phone: +886-2-2799-6111
Title	Audio (CODEC_ALC270A)
Size	Custom
Document Number	
Rev	
Page Modified: Tuesday, March 08, 2011 08:28:58 (UTC/GMT)	Sheet 35 of 43

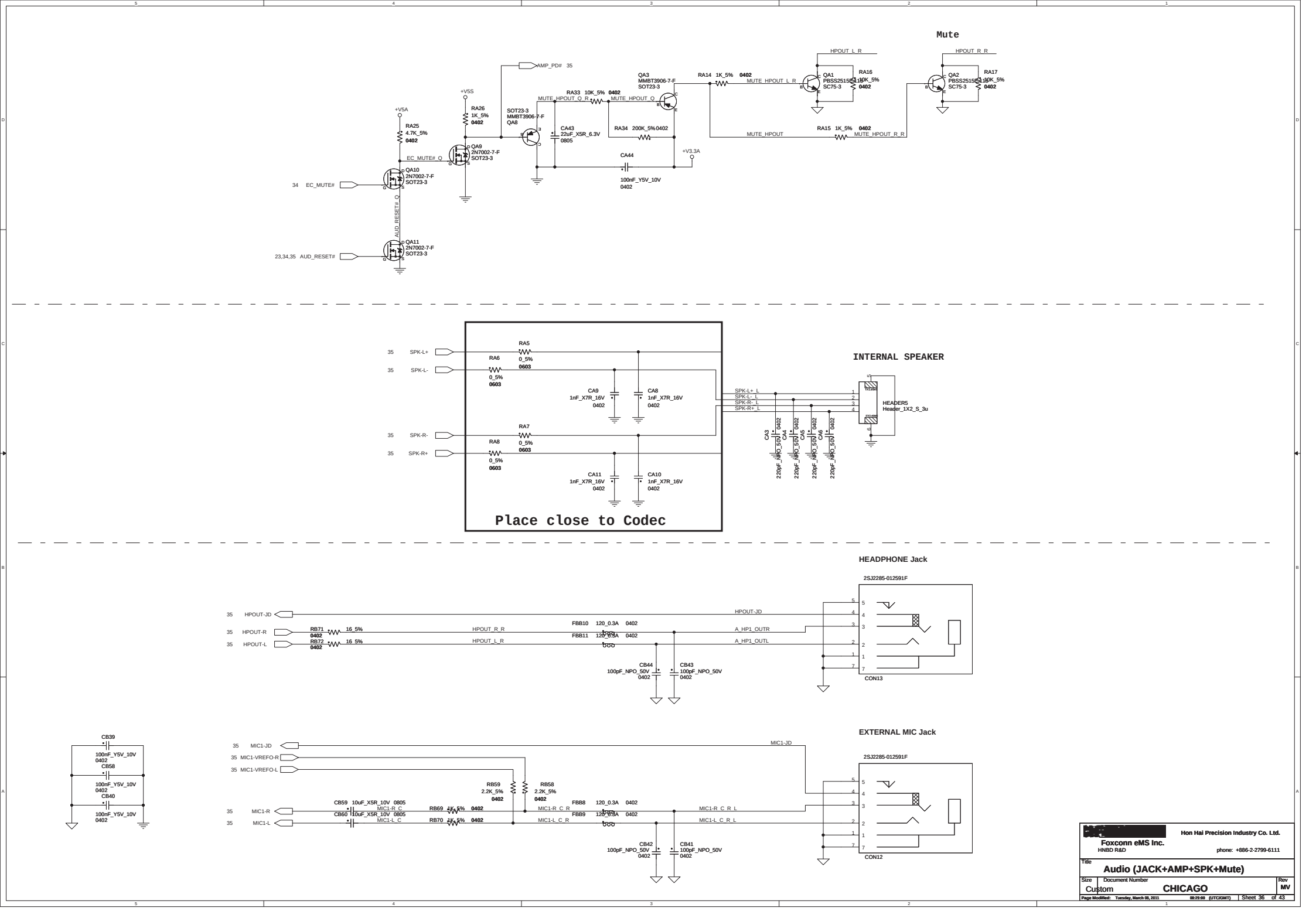

Foxconn eMS Inc.
HNBD R&D

Hon Hai Precision Industry Co. Ltd.
phone: +886-2-2799-6111

Title: Audio (JACK+AMP+SPK+Mute)

Size: Custom | Document Number: CHICAGO | Rev: MV

Page Modified: Tuesday, March 08, 2011 08:29:00 (UTC/GMT) | Sheet 36 of 43

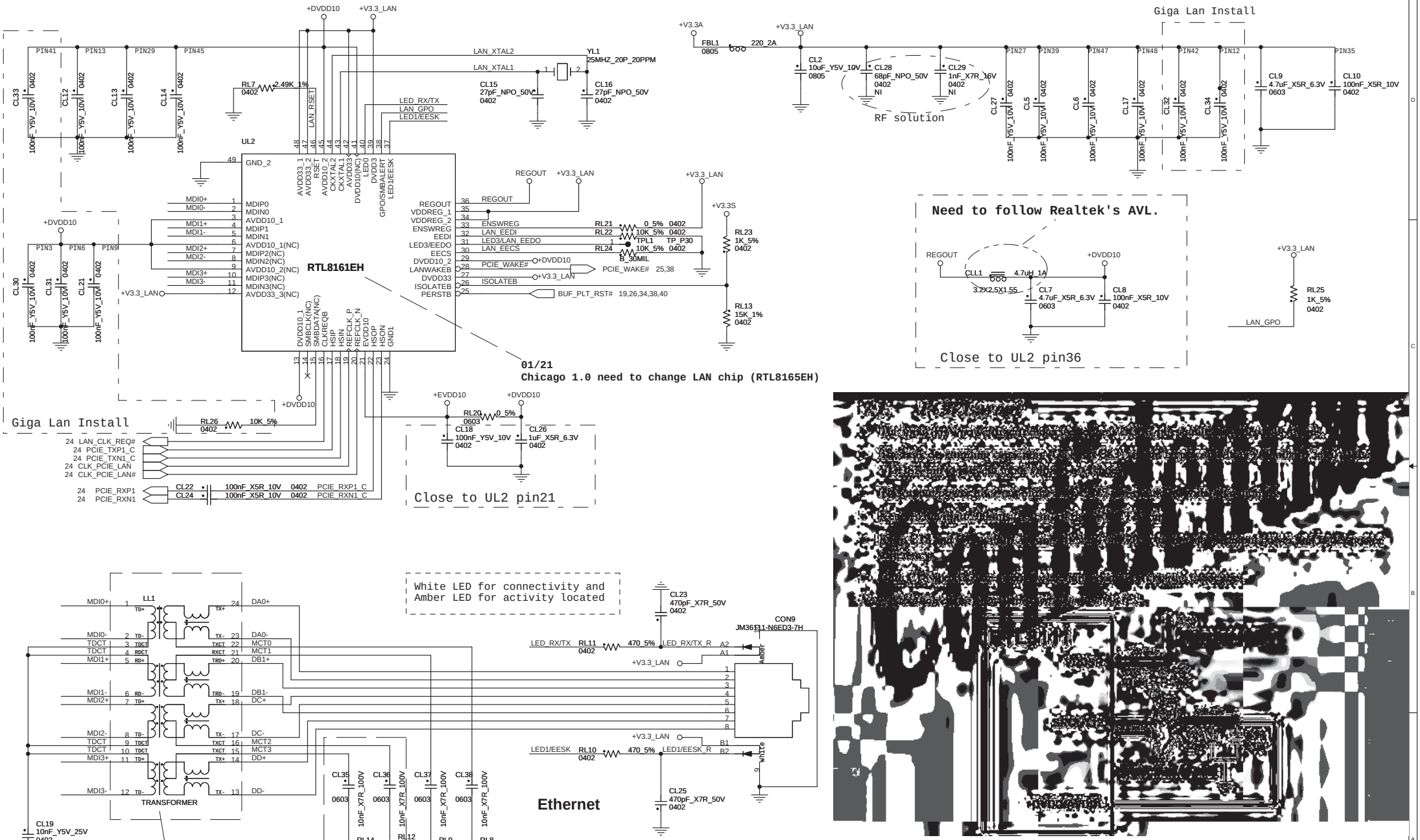

Hon Hai Precision Industry Co. Ltd.

Foxconn eMS Inc.

HNBD R&D

phone: +886-2-2799-6111

Title

LAN (RTL8165EH)

Size	Document Number	Rev
Custom		

Page Modified: Tuesday, March 08, 2011 08:28:59 (UTC/GMT) Sheet 37 of 43

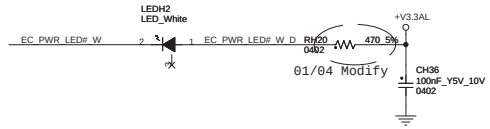

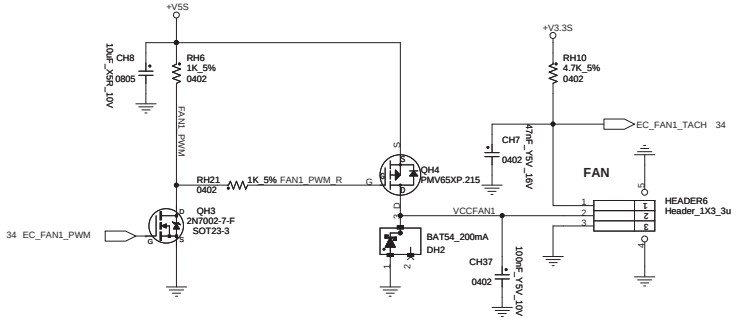

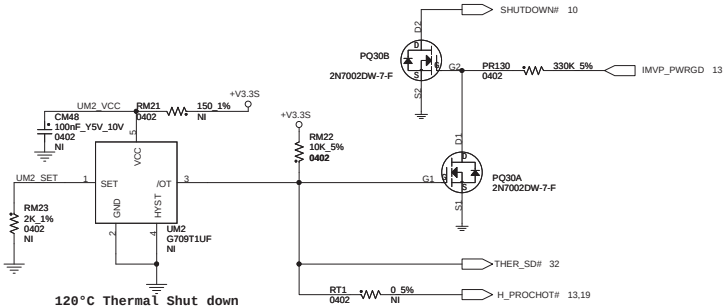

120°C Thermal Shut down

Place Thermal-Sensor near DDR3.

PWR Board CONN.

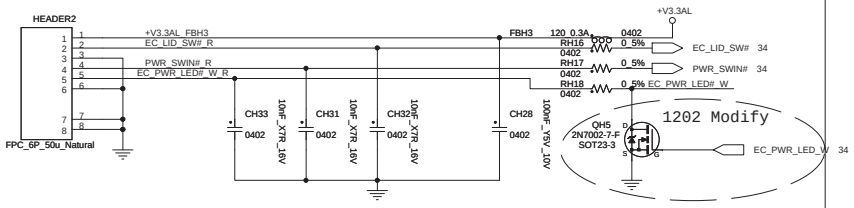

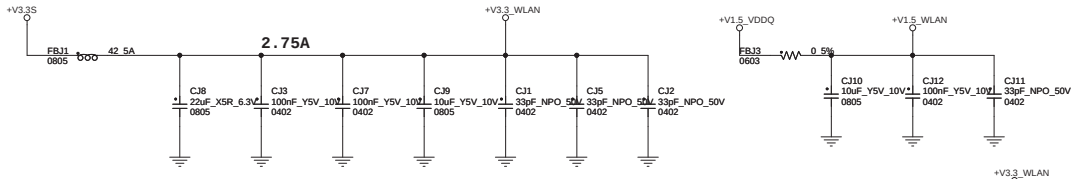

+1_5V=>0.5A Peak/0.375A Normal
+3_3VAux=>2.75A Peak/1.1A Normal

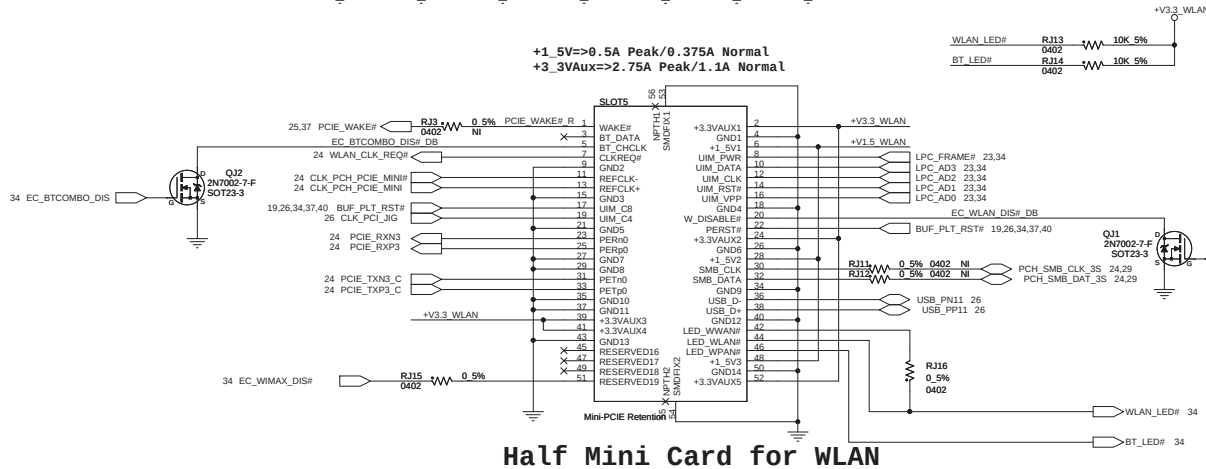

Half Mini Card for WLAN

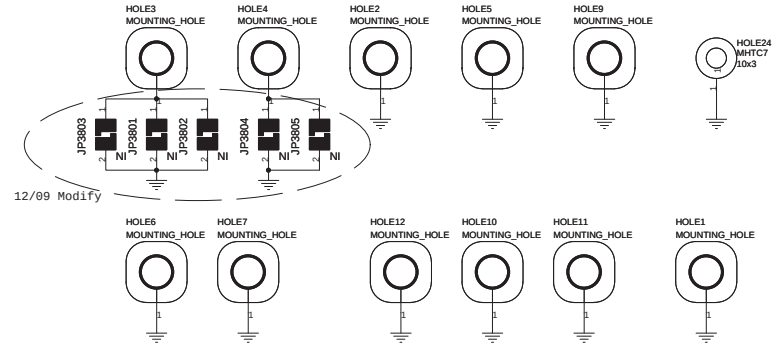

Mounting HOLE

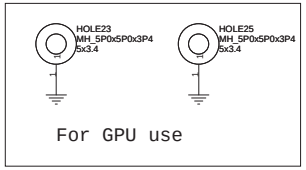

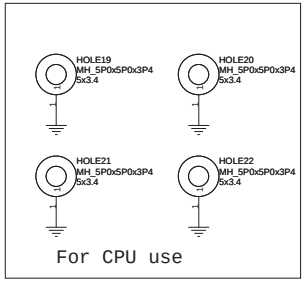

02/09 Modify
Change PCBfootprint from FIDUCIAL_1P_3P_B to FIDUCIAL_MARK

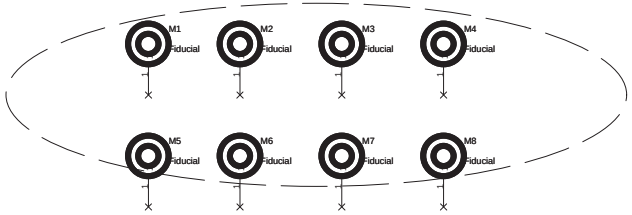

Fiducial Mark

Foxconn eMS Inc. HNBD R&D	Hon Hai Precision Industry Co. Ltd. phone: +886-2-2799-6111	
Title: **Mini PCIe & RJ11 & BT**		
Size: Custom	Document Number	Rev
Page Modified: Tuesday, March 08, 2011 08:29:00 (UTC/GMT)	Sheet 38 of 43	

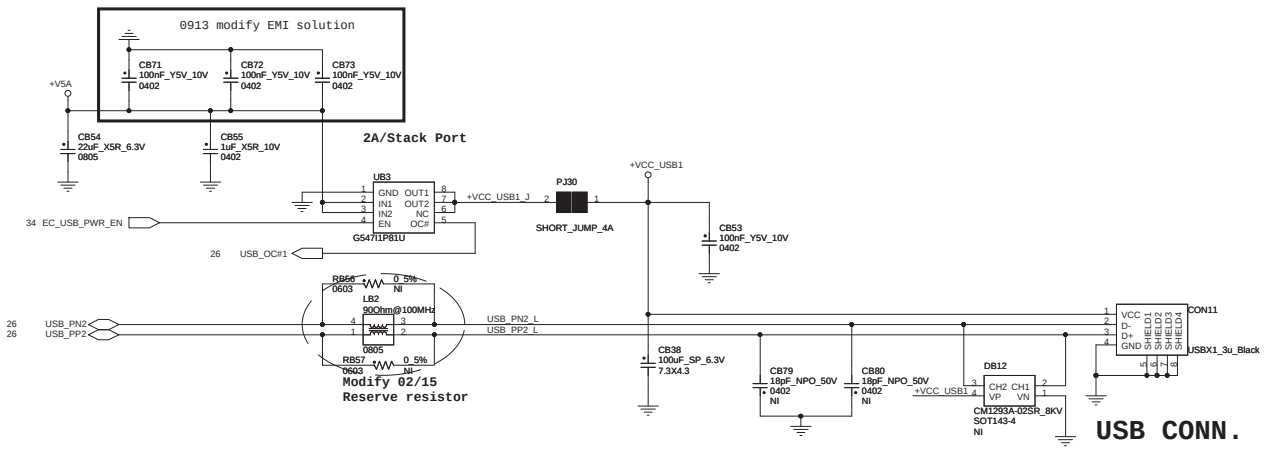

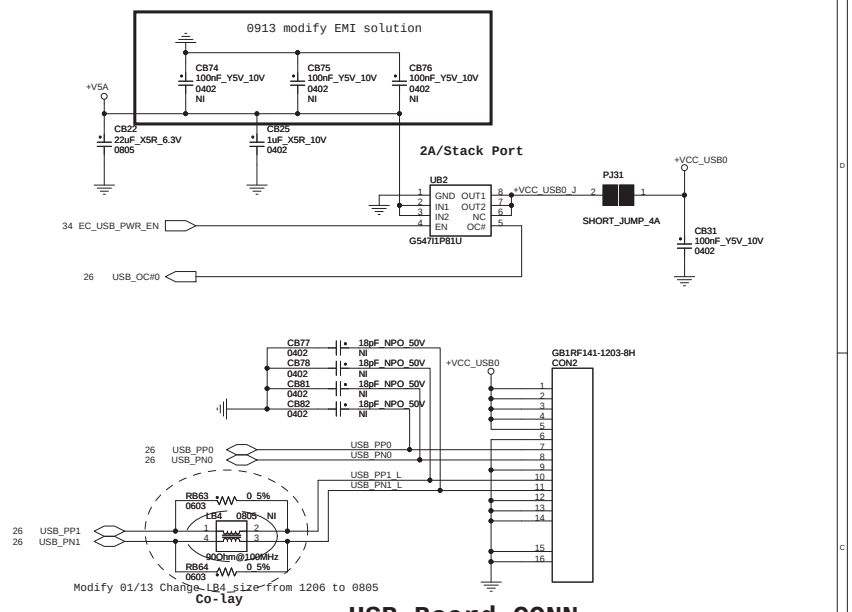

HDD/ODD Status LED

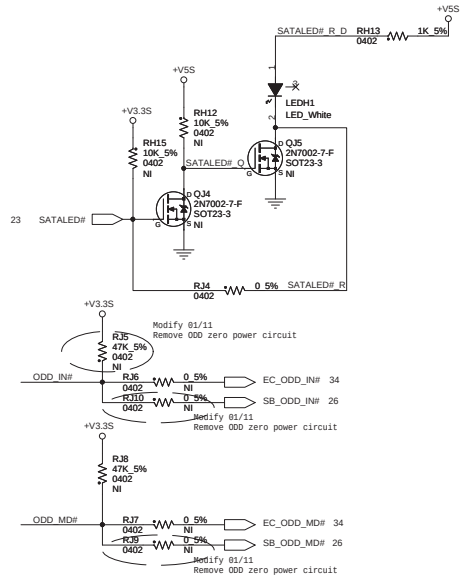

SATA HDD CONN

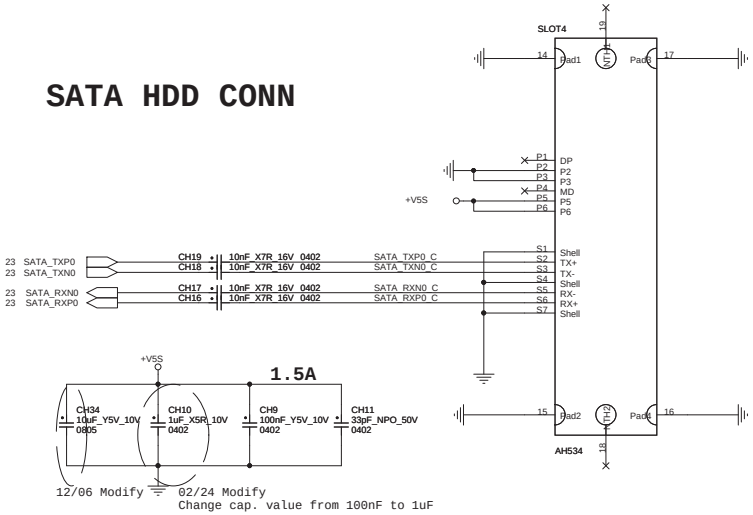

12/06 Modify

02/24 Modify
Change cap. value from 100nF to 1uF

SATA ODD CONN

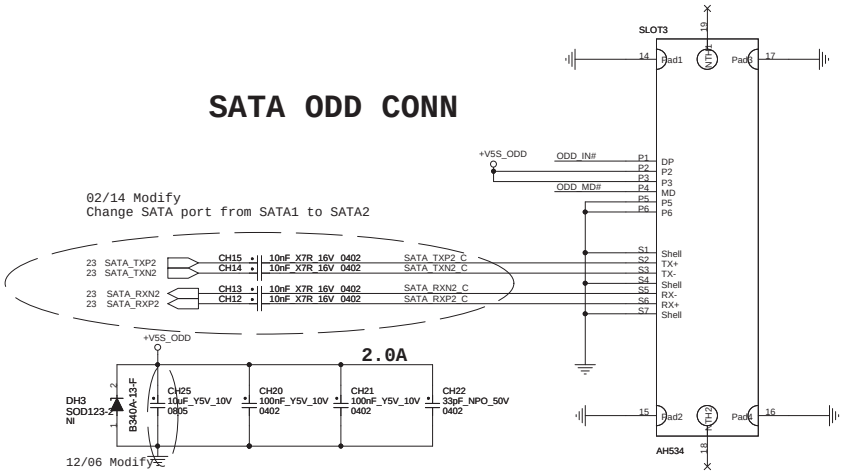

12/06 Modify

Power pin current
max. 1300 mA (less 2ms)

Foxconn eMS Inc. HNBD R&D	Hon Hai Precision Industry Co. Ltd. phone: +886-2-2799-6111	
Title: USBX2/USB DB CONN./SATA CONN.		
Size: Custom	Document Number: CHICAGO	Rev: MV
Page Modified: Tuesday, March 08, 2011 08:28:59 (UTC/GMT)	Sheet 39 of 43	

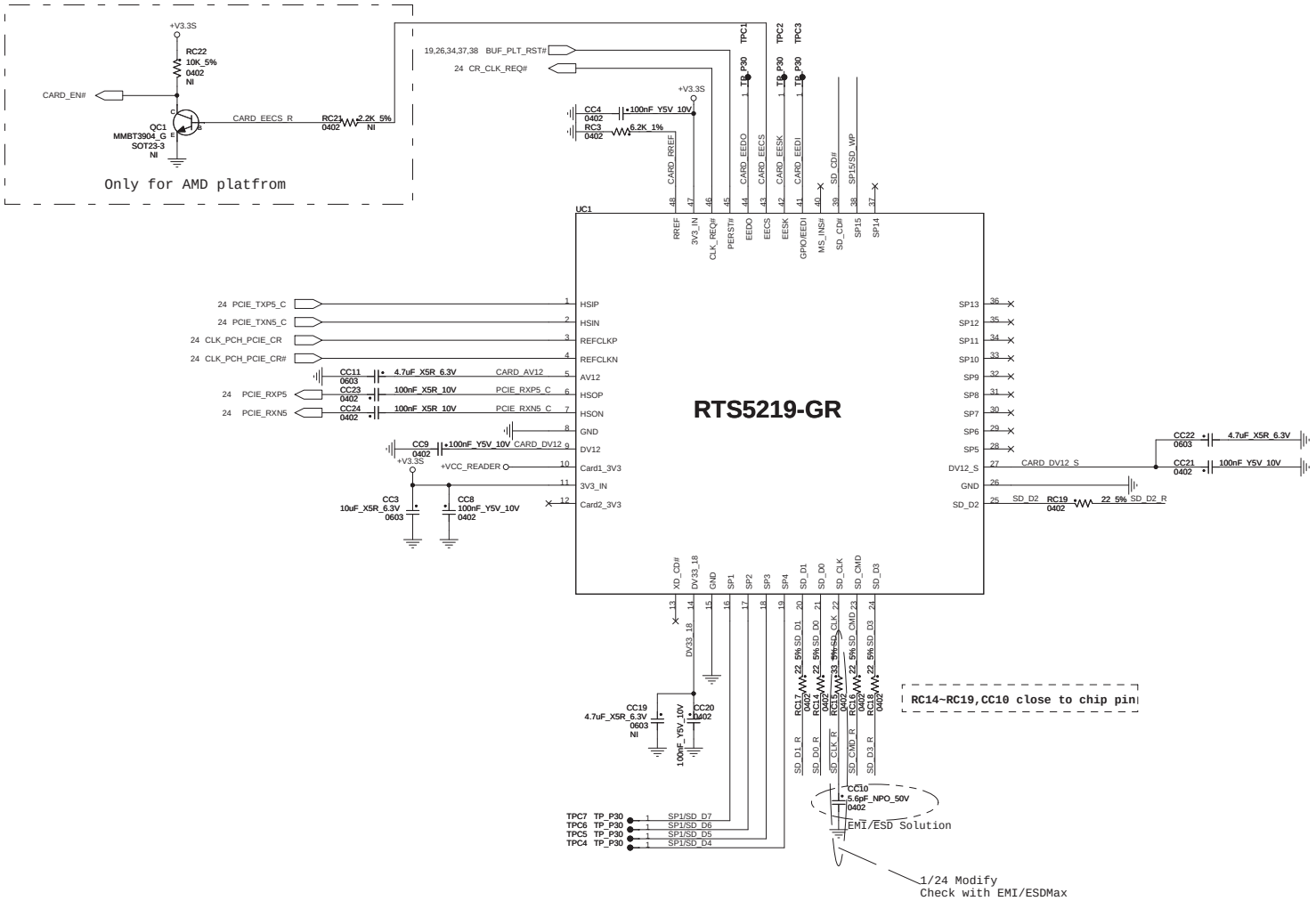

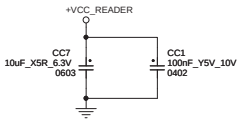

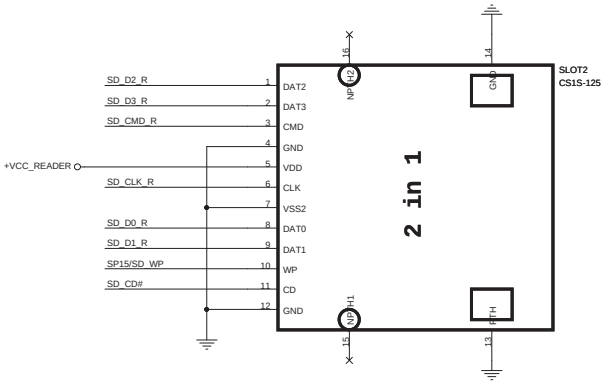

Foxconn eMS Inc. HNBD R&D	Hon Hai Precision Industry Co. Ltd. phone: +886-2-2799-6111	
Title: Card Reader		
Size: Custom	Document Number	Rev: MV
Page Modified: Tuesday, March 08, 2011 08:29:00 (UTC/GMT)	Sheet 40 of 43	

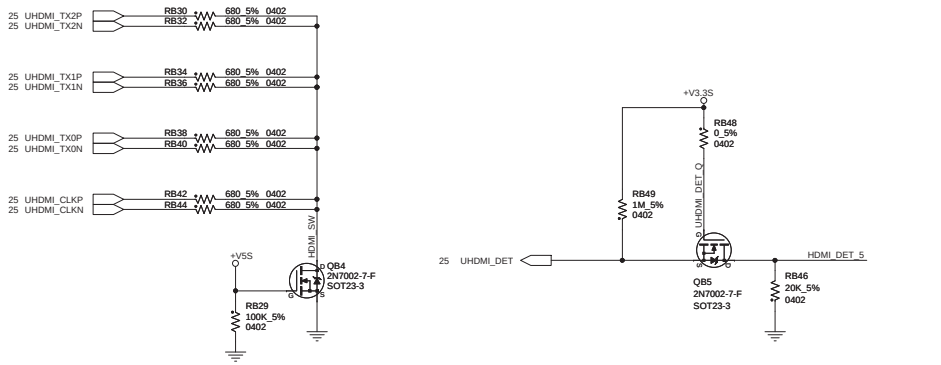

HDMI

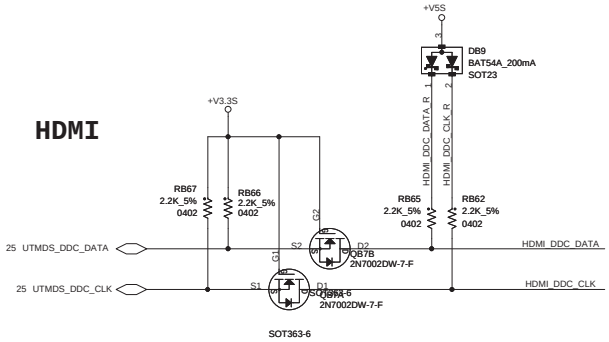

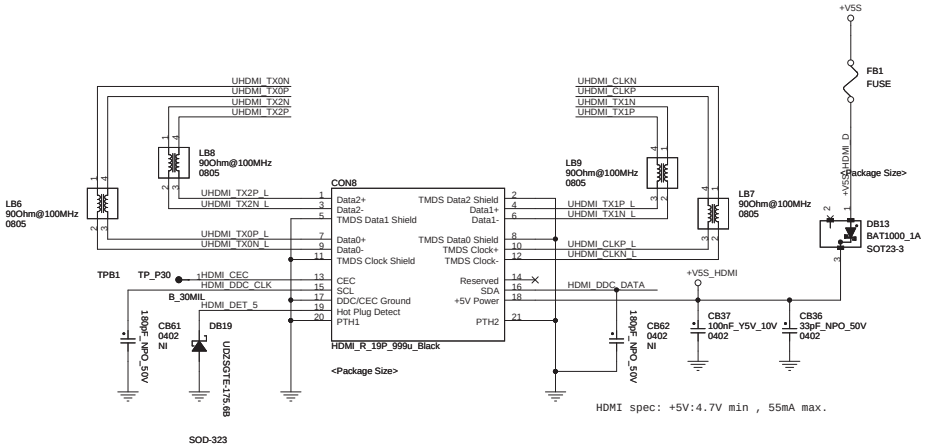

HDMI spec: +5V:4.7V min , 55mA max.

CRT

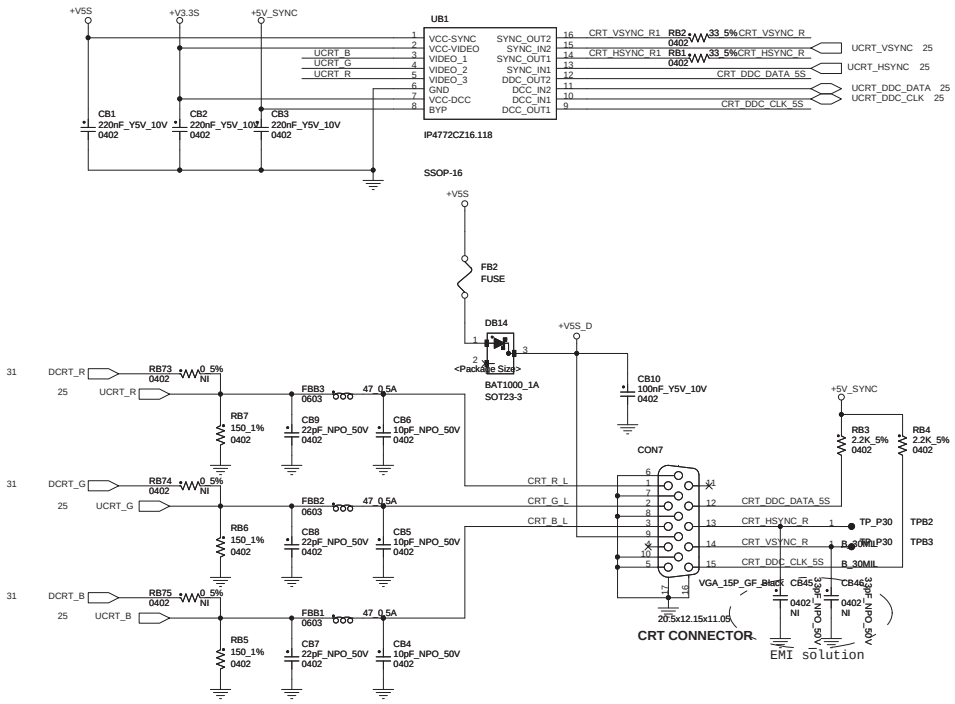

Foxconn eMS Inc. HNBD R&D	Hon Hai Precision Industry Co. Ltd. phone: +886-2-2799-6111	
Title: HDMI & CRT		
Size: Custom	Document Number	Rev
Page Modified: Tuesday, March 08, 2011 08:28:59 (UTC/GMT)	Sheet 41 of 43	

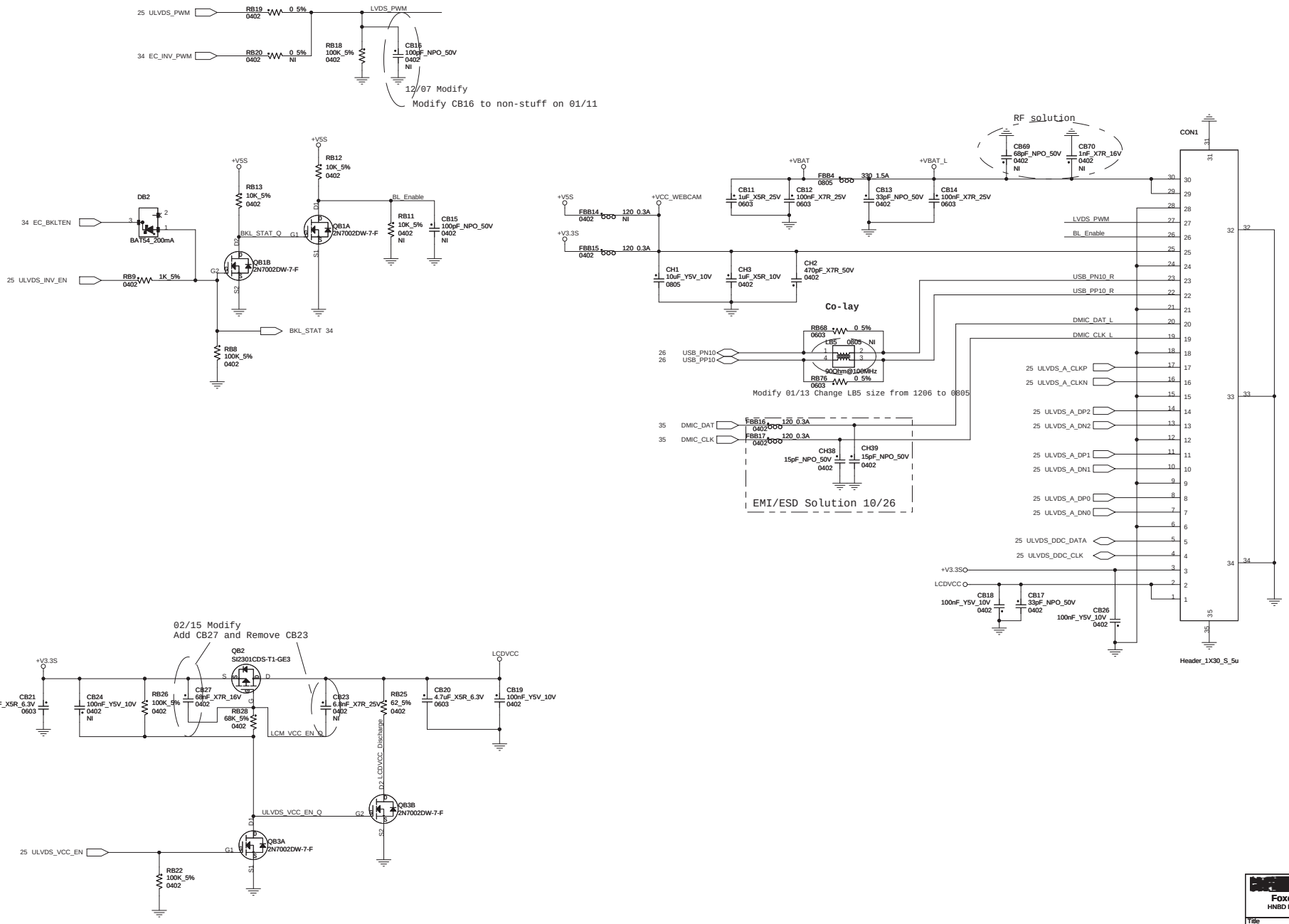

Foxconn eMS Inc.
HNBD R&D

Hon Hai Precision Industry Co. Ltd.
phone: +886-2-2799-6111

Title: LVDS&Webcam

Size: Custom | Document Number: CHICAGO | Rev: MV

Page Modified: Tuesday, March 08, 2011 08:28:57 (UTC/GMT) | Sheet 42 of 43

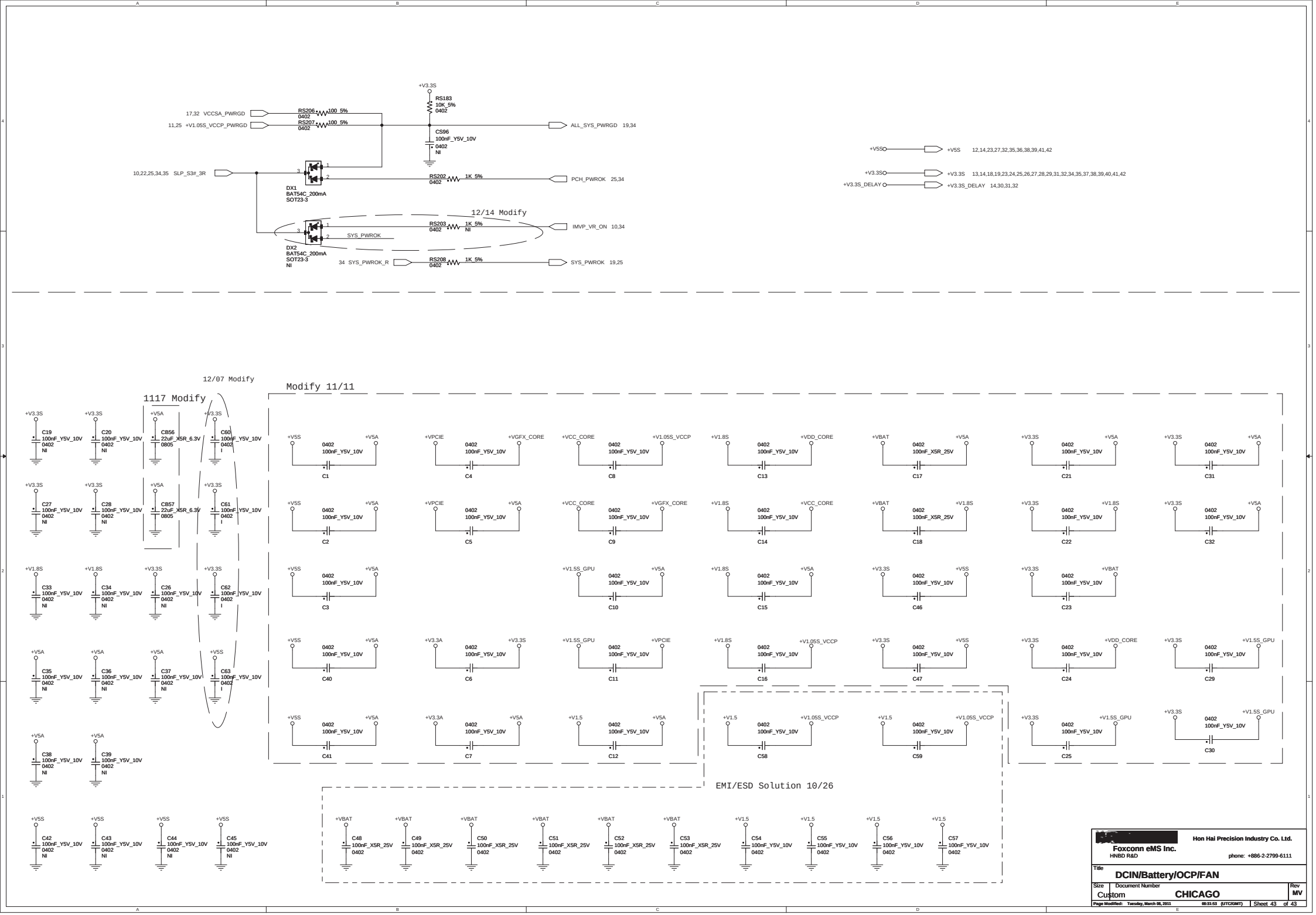
+V3.3S
RS183
10K_5%
0402
17,32 VCCSA_PWRGD
RS206
100_5%
0402
11,25 +V1.05S_VCCP_PWRGD
RS207
100_5%
0402
CS96
100nF_Y5V_10V
0402
NI
ALL_SYS_PWRGD 19,34
10,22,25,34,35 SLP_S3#_3R
DX1
BAT54C_200mA
SOT23-3
RS202
1K_5%
0402
PCH_PWROK 25,34
12/14 Modify
RS203
1K_5%
0402
NI
IMVP_VR_ON 10,34
SYS_PWROK
DX2
BAT54C_200mA
SOT23-3
NI
34 SYS_PWROK_R
RS208
1K_5%
0402
SYS_PWROK 19,25
+V5S
+V5S 12,14,23,27,32,35,36,38,39,41,42
+V3.3S
+V3.3S 13,14,18,19,23,24,25,26,27,28,29,31,32,34,35,37,38,39,40,41,42
+V3.3S_DELAY
+V3.3S_DELAY 14,30,31,32
12/07 Modify
1117 Modify
Modify 11/11
C19 100nF_Y5V_10V 0402 NI
C20 100nF_Y5V_10V 0402 NI
CB56 22uF_X5R_6.3V 0805
C60 100nF_Y5V_10V 0402 I
C27 100nF_Y5V_10V 0402 NI
C28 100nF_Y5V_10V 0402 NI
CB57 22uF_X5R_6.3V 0805
C61 100nF_Y5V_10V 0402 I
C33 100nF_Y5V_10V 0402 NI
C34 100nF_Y5V_10V 0402 NI
C26 100nF_Y5V_10V 0402 NI
C62 100nF_Y5V_10V 0402 I
C35 100nF_Y5V_10V 0402 NI
C36 100nF_Y5V_10V 0402 NI
C37 100nF_Y5V_10V 0402 NI
C63 100nF_Y5V_10V 0402 I
C38 100nF_Y5V_10V 0402 NI
C39 100nF_Y5V_10V 0402 NI
C42 100nF_Y5V_10V 0402 NI
C43 100nF_Y5V_10V 0402 NI
C44 100nF_Y5V_10V 0402 NI
C45 100nF_Y5V_10V 0402 NI
C1 100nF_Y5V_10V 0402
C4 100nF_Y5V_10V 0402
C8 100nF_Y5V_10V 0402
C13 100nF_Y5V_10V 0402
C17 100nF_X5R_25V 0402
C21 100nF_Y5V_10V 0402
C31 100nF_Y5V_10V 0402
C2 100nF_Y5V_10V 0402
C5 100nF_Y5V_10V 0402
C9 100nF_Y5V_10V 0402
C14 100nF_Y5V_10V 0402
C18 100nF_X5R_25V 0402
C22 100nF_Y5V_10V 0402
C32 100nF_Y5V_10V 0402
C3 100nF_Y5V_10V 0402
C10 100nF_Y5V_10V 0402
C15 100nF_Y5V_10V 0402
C46 100nF_Y5V_10V 0402
C23 100nF_Y5V_10V 0402
C40 100nF_Y5V_10V 0402
C6 100nF_Y5V_10V 0402
C11 100nF_Y5V_10V 0402
C16 100nF_Y5V_10V 0402
C47 100nF_Y5V_10V 0402
C24 100nF_Y5V_10V 0402
C29 100nF_Y5V_10V 0402
C41 100nF_Y5V_10V 0402
C7 100nF_Y5V_10V 0402
C12 100nF_Y5V_10V 0402
C58 100nF_Y5V_10V 0402
C59 100nF_Y5V_10V 0402
C25 100nF_Y5V_10V 0402
C30 100nF_Y5V_10V 0402
EMI/ESD Solution 10/26
C48 100nF_X5R_25V 0402
C49 100nF_X5R_25V 0402
C50 100nF_X5R_25V 0402
C51 100nF_X5R_25V 0402
C52 100nF_X5R_25V 0402
C53 100nF_X5R_25V 0402
C54 100nF_Y5V_10V 0402
C55 100nF_Y5V_10V 0402
C56 100nF_Y5V_10V 0402
C57 100nF_Y5V_10V 0402
Foxconn eMS Inc.
HNBD R&D
Hon Hai Precision Industry Co. Ltd.
phone: +886-2-2799-6111
Title
DCIN/Battery/OCP/FAN
Size
Custom
Document Number
CHICAGO
Rev
MV
Page Modified: Tuesday, March 08, 2011
08:31:53 (UTC/GMT)
Sheet 43 of 43